1993
DS Golf Car
Illustrated Parts List

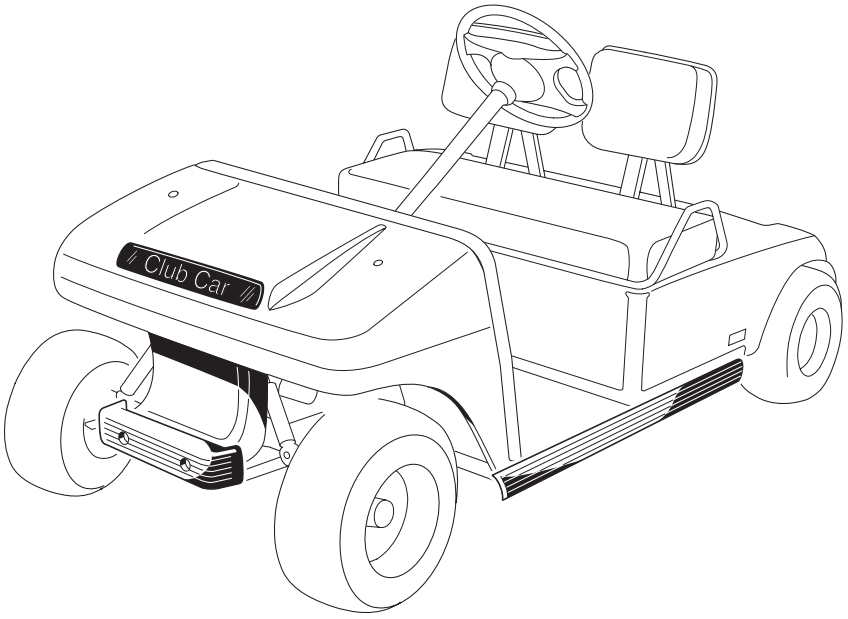

Gasoline and Electric Vehicles

Manual Number 101710702
Edition Code 0892B1008A

MASTERS

GOLF & UTILITY VEHICLES

www.mastersgolfcarts.com - 905-436-0606 - 1-855-226-0606

USING THE ILLUSTRATED PARTS LIST

⚠ WARNING

- **This manual is to be used only for identification and ordering of service parts. Be sure to read and use the maintenance and service manual before attempting any vehicle repairs.**

Use the Table of Contents to find the sections and pages that contain the parts and assemblies you seek. The Table of Contents lists section numbers, and under them, the individual page titles and numbers to be found in that section. The index can be used to find specific parts and assemblies. The index is divided into numerical and alphabetical listings with the page numbers in italic text.

There is a two-page spread for each individual page title in the Table of Contents. On the left-hand page is an illustration showing the parts in their relative positions; the parts are each tagged with an item number in a balloon. The right-hand page is the parts list page, and gives the page title at the top, then the item numbers (corresponding to the numbers on the illustration), part descriptions, and quantity of parts used.

Note that a part description may be indented. This indention corresponds to a parts assembly level indicated by the numbers 1, 2, 3, and 4 at the top left corner of the parts description area of the parts list page. A part that is indented to *level 2* is a component of the *level 1* part (assembly) that it is listed under. A *level 3* part is a component of the *level 2* part that it is listed under, and a *level 4* part is a component of the *level 3* part preceding it. In each case, the part quantity given for a level 2, 3, or 4 part *is the quantity used per next higher level assembly of which it is a component.* A part that is not indented is a *level 1* part. This means that the quantity given is the quantity used per the portion of the vehicle illustrated on that particular spread.

HOW TO ORDER PARTS

Replacement parts and accessories can be obtained from our network of authorized dealers and distributors. You can obtain the name and phone number of your closest authorized Club Car dealer or distributor by visiting our web site at www.clubcar.com and clicking on the "*Distributor Search*" link or by calling our toll-free Service Parts and Technical Assistance hotline at (800) 872-2246 or (706) 863-3000, extension 3887.

Copyright © 1992, 2008 Club Car, Inc.
Club Car and Carryall are registered
trademarks of Club Car, Inc

P. O. Box 204658
Augusta, Georgia 30917-4658 USA
Telephone 706-863-3000
Service Parts Fax 706-855-7413
www.clubcar.com

CONTENTS

INDEX

MAINTENANCE AND SERVICE TOOLS

BODY AND TRIM — **SECTION 1**
- Body and Trim 1-2
- Covers — Front 1-4
- Covers — Rear 1-6
- Seat Back and Bag Hoop 1-8
- Seat Bottom and Armrest 1-10

DRIVE UNIT — **SECTION 2**
- Drive Unit 2-2

BRAKES, PEDAL AND CABLE ASSEMBLY — **SECTION 3**
- Brake Cluster, Right and Left Hand 3-2
- Brake Pedal and Cable Assembly 3-4
- Accelerator Pedal Assembly 3-6

STEERING AND FRONT SUSPENSION — **SECTION 4**
- Steering Column — Aluminum 4-2
- Steering Assembly 4-4
- Front Suspension Assembly — Delta A-Plate 4-6

ELECTRICAL AND BATTERY — **SECTION 5**
- Wiring — Gas Vehicle 5-2
- Electrical Component Box 5-4
- Starter Generator — Mounting 5-6
- Starter Generator Assembly 5-7
- F&R Shifter Assembly 5-8
- Reverse Buzzer 5-10
- Battery 5-11

ENGINE — **SECTION 6**
- Engine ..... 6-2 — 6-12

FUEL AND INTAKE SYSTEM — **SECTION 7**
- Fuel System Assembly 7-2
- Carburetor Assembly 7-4
- Governor Guard and Intake Hose 7-6
- Expansion Chamber, Choke and Filter 7-8
- Governor and Accelerator Cables 7-10

EXHAUST SYSTEM — **SECTION 8**
- Exhaust System 8-2

TORQUE CONVERTER — **SECTION 9**
- Drive Clutch Assembly 9-2
- Driven Clutch Assembly 9-4

TRANSMISSION AND GOVERNOR — **SECTION 10**
- Transmission and Governor Assembly 10-2

REAR SUSPENSION — GAS VEHICLE — **SECTION 11**
- Rear Suspension Assembly 11-2
- Inner Frame Assembly 11-4

ELECTRICAL — ELECTRIC VEHICLE — **SECTION 12**
- Power Wiring — Electric Vehicle 12-2
- V-Glide Wiper Switch 12-4
- Resistor and Board Assembly — V-Glide 12-6
- Forward and Reverse Switch Assembly 12-8
- Power Wiring — Solid State Controller 12-10
- Forward and Reverse Switch — Solid State Controller 12-12
- V-Glide Wiper Switch — Solid State Controller 12-14
- Reverse Buzzer 12-16

CHARGERS — **SECTION 13**
- Model 13800 Accu-Power 13-2
- Model 14000 Ultra-Power 13-4

MOTOR — **SECTION 14**
- CLUB CAR Model #1012191 and #1014678 14-2

REAR SUSPENSION ASSEMBLY — ELECTRIC VEHICLE — **SECTION 15**
- Rear Suspension Assembly — Electric Vehicle 15-2

INDEX

GAS		G
ELECTRIC		E
BODY AND TRIM – FRONT AND REAR COVERS		1
DRIVE UNIT		2
BRAKES, PEDAL AND CABLE ASSEMBLY		3
STEERING AND FRONT SUSPENSION		4

INDEX

ELECTRICAL AND BATTERY	5
ENGINE	6
FUEL, INTAKE AND GOVERNOR SYSTEM	7
EXHAUST SYSTEM	8
TORQUE CONVERTER	9
TRANSMISSION AND GOVERNOR	10
REAR SUSPENSION	11

INDEX

ELECTRIC	E
ELECTRICAL	12
BATTERY CHARGER	13
MOTOR	14
REAR SUSPENSION	15

MAINTENANCE SERVICE TOOLS

DESCRIPTION	PART NO.
Internal Retaining Pliers	1013593
Brake Adjusting Tool	1013582
Volt Ohm Meter	1011480
Continuity Tester	1011273
Retaining Ring Pliers (45° External)	1012549
Retaining Ring Pliers (90° Internal)	1012560
Keyswitch Tool	1012801
Seal Puller	1012809
Bearing Puller	1012811
Bearing Puller Wedge Attachment	1012812
Tachometer	1016112
Drive Clutch Puller	1014496
Clutch Alignment Tool	1014498
Touch-Up Paint - Enamel Beige	1017096-01
Touch-Up Paint - Enamel White	1017096-02
Touch-Up Paint - Enamel Non-Standard	1017096-03
Touch-Up Paint - Enamel Gray	1017096-04
Touch-Up Paint - Enamel Green	1017096-05
Touch-Up Paint - Enamel Red	1017096-06
Touch-Up Paint - Enamel Light Blue	1017096-07
Touch-Up Paint - Lacquer Beige	1017097-01
Touch-Up Paint - Lacquer White	1017097-02
Touch-Up Paint - Lacquer Non-Standard	1017097-03
Touch-Up Paint - Lacquer Gray	1017097-04
Touch-Up Paint - Lacquer Green	1017097-05
Touch-Up Paint - Lacquer Red	1017097-06
Touch-Up Paint - Lacquer Light Blue	1017097-07
Transmission Tool Kit	1014115
Drive Unit Pinion Seal Tool	1014161
Drive Unit Axle Seal Tool	1014162
Steering Column Bearing Press Tool	1014264
Steering Column Retaining Ring Tool	1014259
Battery Terminal Protector	1014305
Dry Moly Lubricant	1012151
Flexible Cowl Repair Kit	1014963
Hydrometer	1011478
Battery Tester (Discharge Machine)	1010687
Battery Thermometer	1011767
Fly Wheel Puller Kit	1016627
Valve Seat Cutter Holder Bar	1016551
Valve Seat Cutter Holder	1016552
Valve Seat Cutter 45° (32mm Diameter)	1016553
Valve Seat Cutter 45° (35mm Diameter)	1016554
Valve Seat Cutter 32° (35mm Diameter)	1016555
Clutch Tool Kit	1014510
Spring Tune-Up Kit (OHV Engine)	1016110-02
Compression Gauge	1016410-01
Adapter	1016410-02
Valve Spring Compressor	1016411-01
Adapter	1016411-02
Valve Guide Reamer	1016412-01
Arbor	1016412-02
Valve Clearance Adjuster Screw Holder	1016413
Piston Ring Compressor Kit	1016414
Piston Ring Plier	1016415
Bearing Driver Set	1016416
Bearing and Oil Seal Remover Assembly	1016417
Gear Yoke	1016418
Generator Belt Tension Tool	1016867
Muffler Spring Tool	1016712

Please refer to the Maintenance and Service Manual for proper tool application.

Section 1

BODY AND TRIM
FRONT AND REAR COVERS

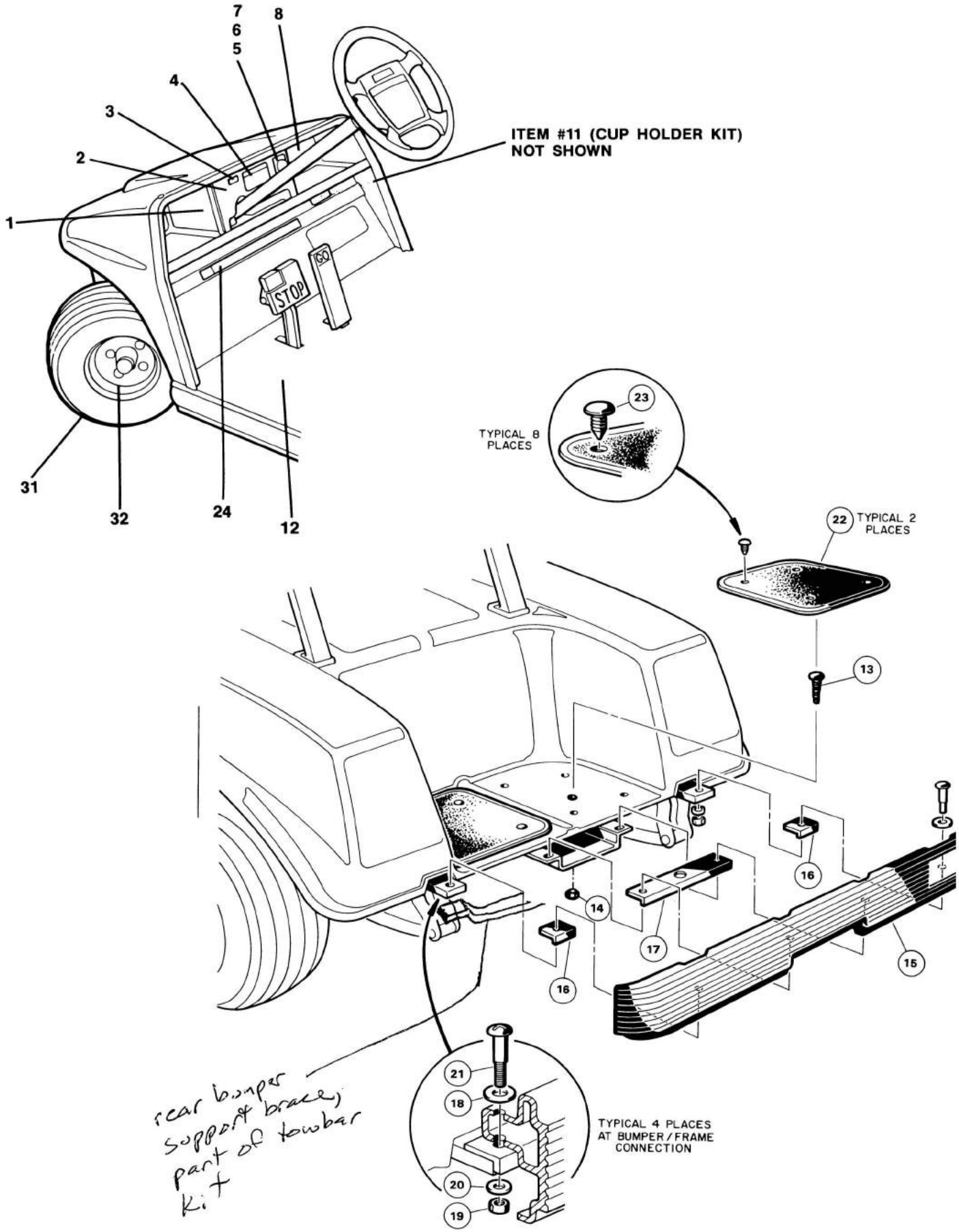

BODY AND TRIM

BODY AND TRIM

ITEM NUMBER	PART NUMBER	1 2 3 4 DESCRIPTION	UNITS PER VEHICLE GAS	UNITS PER VEHICLE ELECTRIC
1	1013980	DASH COMPONENT, LEFT (TAN)	1	1
1	1013344	DASH COMPONENT, LEFT (BLACK)	1	1
2	1016604-01	CENTER DASH PANEL (TAN)		1
2	1016620-01	CENTER DASH PANEL WITH OIL LIGHT OPENING (TAN)	1	
2	1016604-02	CENTER DASH PANEL (BLACK)		1
2	1016620-02	CENTER DASH PANEL WITH OIL LIGHT OPENING (BLACK)	1	
2	1016620-03	CENTER DASH PANEL WITH OIL LIGHT AND FUEL GAUGE (BLACK)	1	
3	1016630	OIL LIGHT	1	
4	1013390	DECAL, GOLF ETIQUETTE	1	1
5	1012415	SWITCH, KEY (INCLUDES 2 KEYS) 12 VOLT	1	
5	1012531	SWITCH, KEY (INCLUDES 2 KEYS) 36 VOLT		1
6	1012505	KEY	PAIR	
7	1012530	DECAL, ON/OFF	1	1
8	1013979	DASH COMPONENT, RIGHT (TAN)	1	1
8	1013343	DASH COMPONENT, RIGHT (BLACK)	1	1
9	7848	SCREW - 1/4"-14 X 3/4" HEX HEAD CAP SCREW	6	6
10	1016952	1/4-20 U-NUT	2	2
11	1017083-01	CUP HOLDER KIT INCLUDES ITEMS 9 AND 10	2	2
12	1015032	MAT, FLOOR	1	1
13	8251	SCREW, PHILLIPS TRUSS HEAD, 1/4-20	2	2
14	8233	LOCKNUT, NYLON, 1/4-20	2	2
15	1016379	REAR BUMPER	1	1
16	1016874	MOUNTING PLATE — SHORT	2	2
17	1016875	MOUNTING PLATE — LONG	2	2
18	1017042	3/8 FLATWASHER (BLACK)	4	4
19	8986	LOCKNUT, 5/16-18 DIMPLED	4	4
20	1241	FLATWASHER, 5/16	4	4
21	1016876	3/8 X .98 PHILLIPS TRUSS HEAD SHOULDER BOLT	4	4
22	1014392	MAT, BAG WELL	2	2
23	1010434	FASTENER, PLASTIC BARREL	8	8
24	1014883	DASH WARNING DECAL	1	1
25	1017073	FENDER, INNER — RIGHT	1	1
26	1016968	FENDER, INNER — LEFT	1	1
27	332	FLATWASHER, 1/4"	6	
28	304	BOLT, 1/4-20 X 1" HEX	6	
29	1012186	SEAL, DUST	2	2
30	1010984	NUT, LUG 1/2-20	16	16
31	1015705-01	TIRE AND WHEEL ASSEMBLY, BEIGE (STANDARD RIB)	4	4
31	1015705-02	TIRE AND WHEEL ASSEMBLY, BEIGE (POWER RIB)	4	4
31	1015705-03	TIRE AND WHEEL ASSEMBLY, BEIGE (X-TRA TRAC TERRA)	4	4
31	1015705-04	TIRE AND WHEEL ASSEMBLY, BEIGE (WHITE WALL POWER RIB)	4	4
31	1015705-05	TIRE AND WHEEL ASSEMBLY, BEIGE (TERRAGARD)	4	4
31	1016514-01	TIRE AND WHEEL ASSEMBLY, WHITE (STANDARD RIB)	4	4
31	1016514-02	TIRE AND WHEEL ASSEMBLY, WHITE (POWER RIB)	4	4
31	1016514-03	TIRE AND WHEEL ASSEMBLY, WHITE (SOFT TRAC)	4	4
31	1016514-04	TIRE AND WHEEL ASSEMBLY, WHITE (WHITE WALL POWER RIB)	4	4
31	1016514-05	TIRE AND WHEEL ASSEMBLY, WHITE (TERRAGARD)	4	4
32	1015707	WHEEL RIM (BEIGE) (UNMOUNTED RIMS NOT SHOWN)	4	4
32	1014771	WHEEL RIM (WHITE) (UNMOUNTED RIMS NOT SHOWN)	4	4

GAS

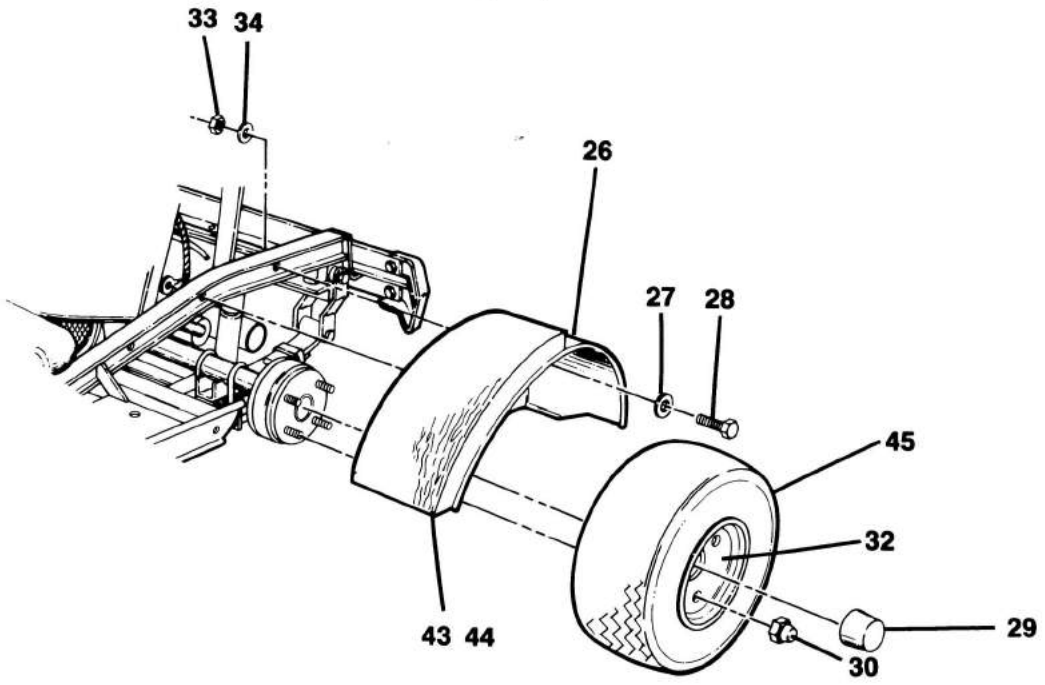

ELECTRIC

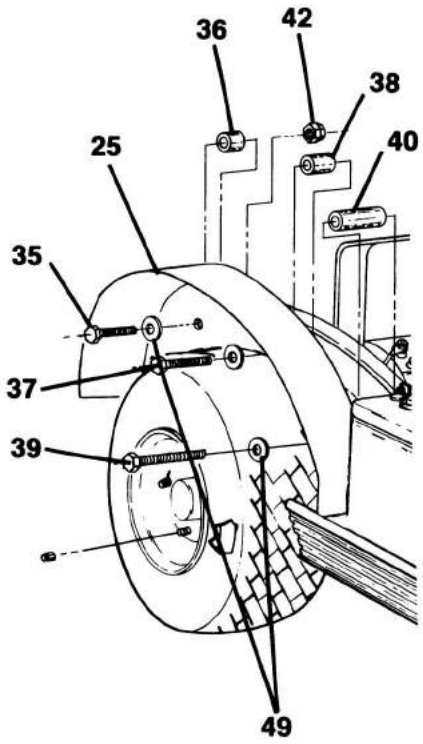

BODY AND TRIM (CONTINUED)

BODY AND TRIM (CONTINUED)

ITEM NUMBER	PART NUMBER	1 2 3 4 DESCRIPTION	UNITS PER VEHICLE GAS	UNITS PER VEHICLE ELECTRIC
33	1028	NUT, 1/4-20 HEX	6	
34	451	LOCKWASHER, 1/4	6	
35	1013509	BOLT, HEX HEAD, 1/4-20 X 1-3/4"		2
36	1013507	SPACER, 1"		2
37	343	BOLT, HEX HEAD, 1/4-20 X 3"		2
38	1013506	SPACER, 2-1/8"		2
39	1012462	BOLT, HEX HEAD, 1/4-20 X 3-1/2"		2
40	1013508	SPACER, 2-3/4"		2
41	332	FLATWASHER, 1/4"		6
42	8233	LOCKNUT, 1/4-20 UNC		6
43	1015421	SOUND INSULATION (LEFT)	1	
44	1015422	SOUND INSULATION (RIGHT)	1	
45	1015672	TIRE — UNMOUNTED (POWER RIB)	4	4
45	1015674	TIRE — UNMOUNTED (SOFT TRAC)	4	4
45	7271	TIRE — UNMOUNTED (STANDARD RIB)	4	4

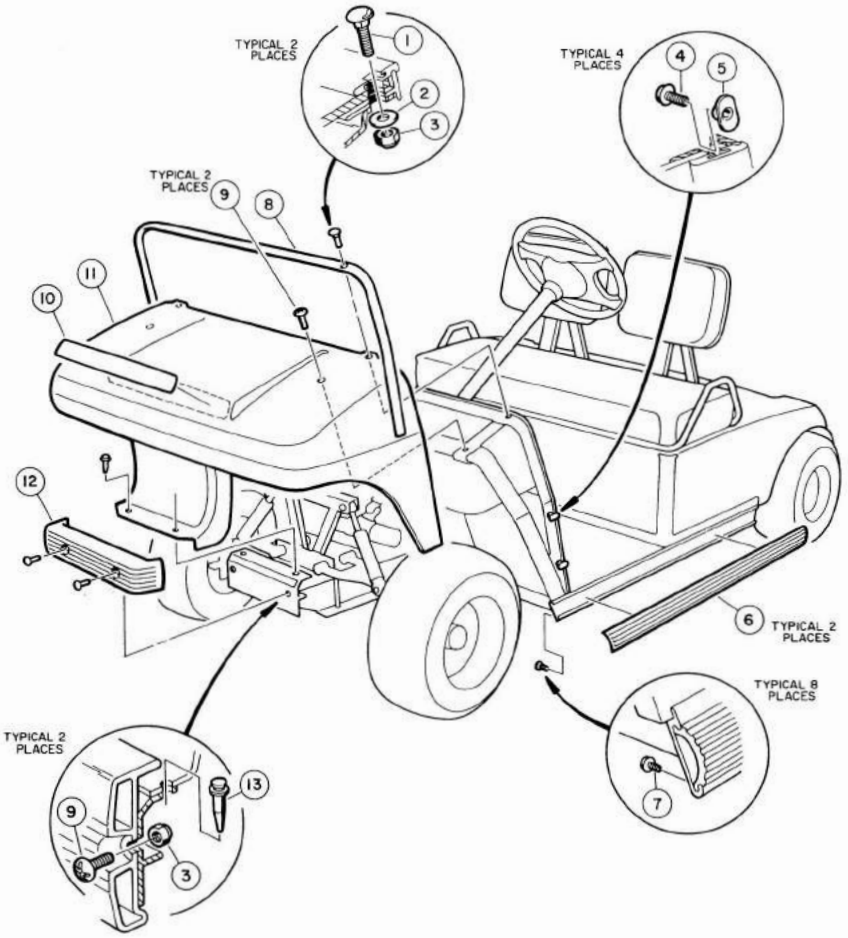

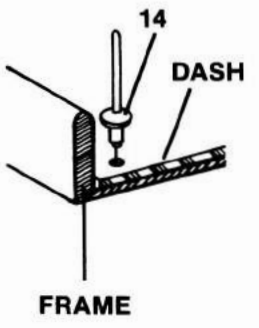

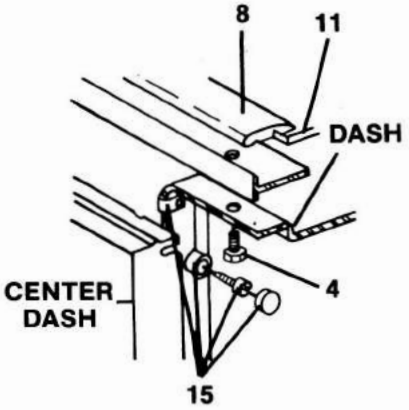

COVERS — FRONT

COVERS — FRONT

ITEM NUMBER	PART NUMBER	1 2 3 4 DESCRIPTION	UNITS PER VEHICLE GAS	UNITS PER VEHICLE ELECTRIC
1	1010435	CARRIAGE BOLT, 5/16-18 UNC-2A	2	2
2	1241	5/16 FLATWASHER	2	2
3	1017180	LOCKNUT, 5/16-18 UNC-2B (BLACK)	2	2
4	1011017	FLANGE LOCK SCREW	6	6
5	1011394	SLAB BASE "T" NUT PACKAGE (4 PIECES)	1	1
6	1013983	BUMPER, SIDE GUARD	2	2
7	1012047	SCREW, #8-32 SELF TAPPING	8	8
8	1011014	COWL TRIM	1	1
9	1017177	SCREW, 5/16-18 X 1.00 PHILLIPS HEAD TRUSS	2	2
10	1014198	NAMEPLATE KIT	1	1
11	1016925-01	COWL (BEIGE)	1	1
11	1016925-02	COWL (WHITE)	1	1
11	1016925-03	COWL (NON-STANDARD)	1	1
11	1016925-04	COWL (GRAY)	1	1
11	1016925-05	COWL (GREEN)	1	1
11	1016925-06	COWL (RED)	1	1
11	1016925-07	COWL (LIGHT BLUE)	1	1
11	1016939-01	COWL WITH HEADLIGHT OPENING (BEIGE)	1	1
11	1016939-02	COWL WITH HEADLIGHT OPENING (WHITE)	1	1
11	1016939-03	COWL WITH HEADLIGHT OPENING (NON-STANDARD)	1	1
11	1016939-04	COWL WITH HEADLIGHT OPENING (GRAY)	1	1
11	1016939-05	COWL WITH HEADLIGHT OPENING (GREEN)	1	1
11	1016939-06	COWL WITH HEADLIGHT OPENING (RED)	1	1
11	1016939-07	COWL WITH HEADLIGHT OPENING (LIGHT BLUE)	1	1
12	1016868	BUMPER, FRONT	1	1
13	1016967	BLIND RIVET	2	2
14	7973	POP RIVET, 3/16 X 1/2"	7	7
15	1013986	SNAP WASHER KIT (BROWN)	2	2
15	1014645	SNAP WASHER KIT (BLACK)	2	2

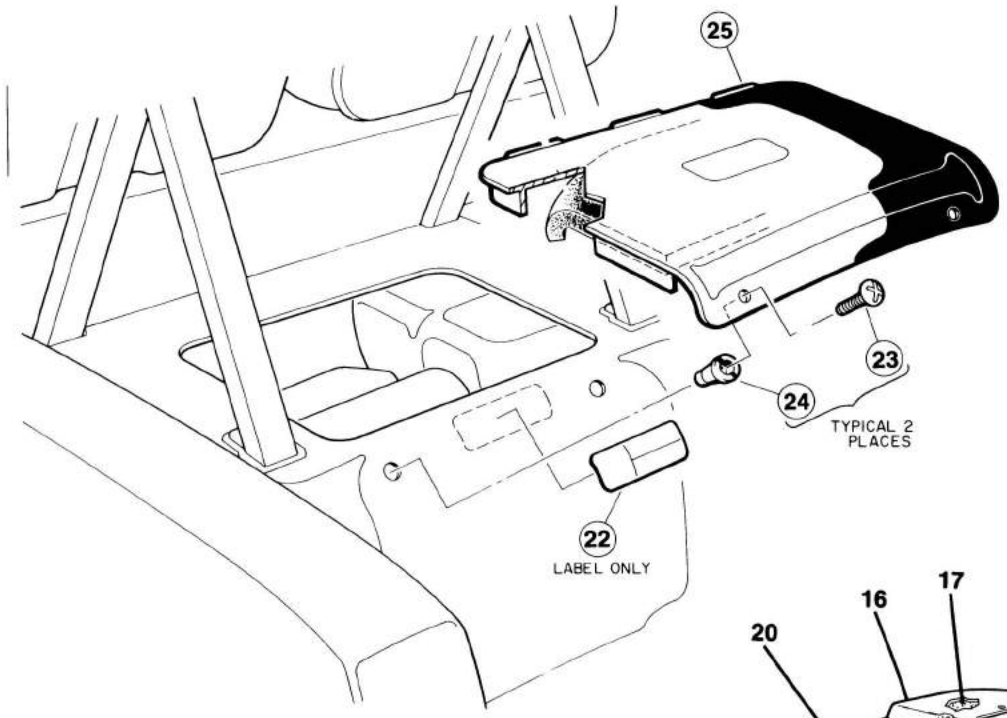

GAS VEHICLE

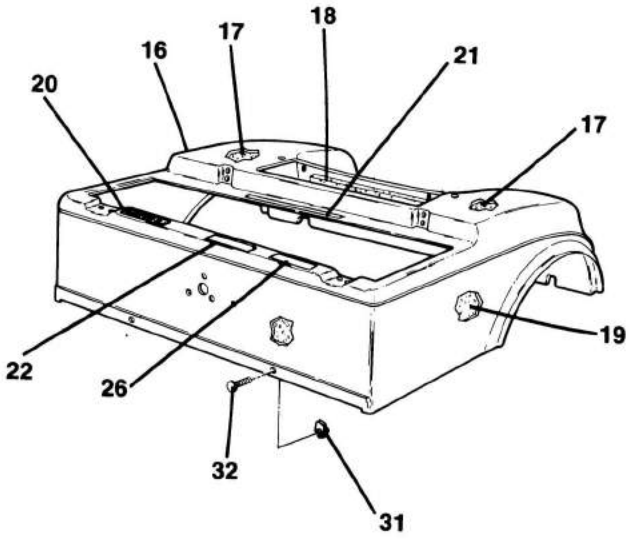

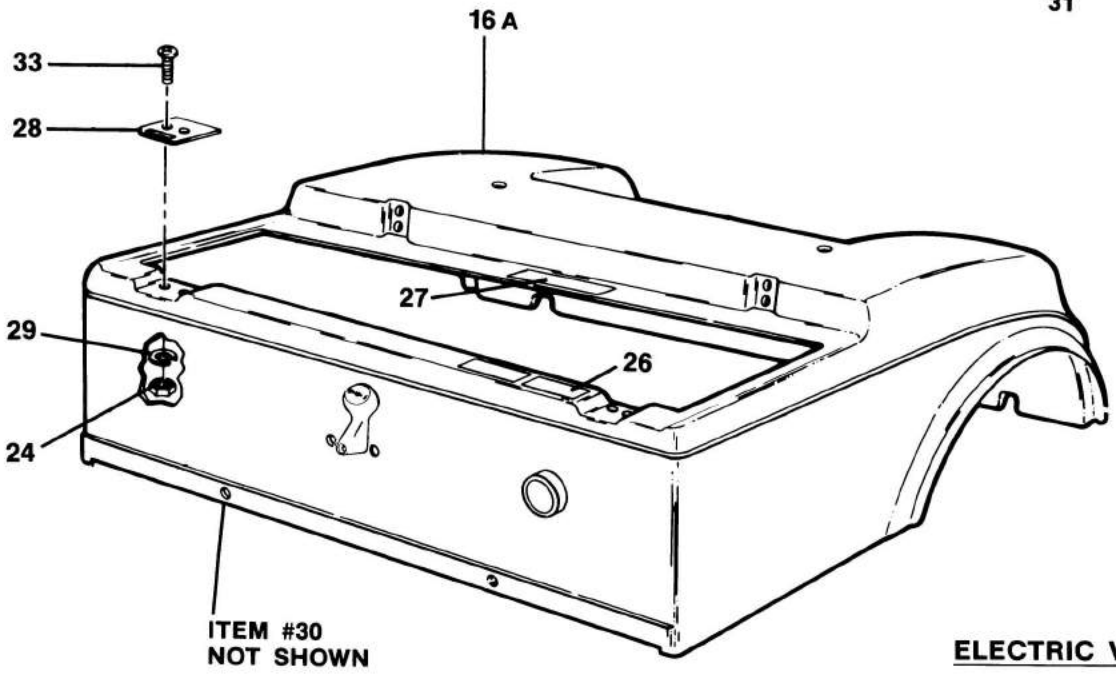

ELECTRIC VEHICLE

COVERS — REAR

COVERS — REAR

ITEM NUMBER	PART NUMBER	1 2 3 4 DESCRIPTION	UNITS PER VEHICLE GAS	UNITS PER VEHICLE ELECTRIC
16	1016926-01	BODY (BEIGE)	1	
16	1016926-02	BODY (WHITE)	1	
16	1016926-03	BODY (NON-STANDARD)	1	
16	1016926-04	BODY (GRAY)	1	
16	1016926-05	BODY (GREEN)	1	
16	1016926-06	BODY (RED)	1	
16	1016926-07	BODY (LIGHT BLUE)	1	
16A	1016933-01	BODY (BEIGE)		1
16A	1016933-02	BODY (WHITE)		1
16A	1016933-03	BODY (NON-STANDARD)		1
16A	1016933-04	BODY (GRAY)		1
16A	1016933-05	BODY (GREEN)		1
16A	1016933-06	BODY (RED)		1
16A	1016933-07	BODY (LIGHT BLUE)		1
16A	1016962-01	BODY WITH TAILLIGHT OPENINGS (BEIGE)		1
16A	1016962-02	BODY WITH TAILLIGHT OPENINGS (WHITE)		1
16A	1016962-03	BODY WITH TAILLIGHT OPENINGS (NON-STANDARD)		1
16A	1016962-04	BODY WITH TAILLIGHT OPENINGS (GRAY)		1
16A	1016962-05	BODY WITH TAILLIGHT OPENINGS (GREEN)		1
16A	1016962-06	BODY WITH TAILLIGHT OPENINGS (RED)		1
16A	1016962-07	BODY WITH TAILLIGHT OPENINGS (LIGHT BLUE)		1
16	1016962-08	BODY WITH TAILLIGHT OPENINGS (BEIGE)	1	
16	1016962-09	BODY WITH TAILLIGHT OPENINGS (WHITE)	1	
16	1016962-10	BODY WITH TAILLIGHT OPENINGS (NON-STANDARD)	1	
16	1016962-11	BODY WITH TAILLIGHT OPENINGS (GRAY)	1	
16	1016962-12	BODY WITH TAILLIGHT OPENINGS (GREEN)	1	
16	1016962-13	BODY WITH TAILLIGHT OPENINGS (RED)	1	
16	1016962-14	BODY WITH TAILLIGHT OPENINGS (LIGHT BLUE)	1	
17	1015420	SOUND INSULATION	2	
18	1015419	SOUND INSULATION	1	
19	1016963	SOUND INSULATION	1	
20	1015476	GASOLINE TANK DANGER LABEL	1	
21	1016083	MANIFOLD WARNING LABEL	1	
22	1013392	WARNING: MOVING PARTS DECAL	2	
23	1017114	SCREW, 1/4-20 X 1 PHILLIPS HEAD (BLACK)	8	8
24	8233	LOCKNUT, 1/4-20 NYLON	4	4
24	1015525	1/4-20 BLIND NUT	2	
25	1015829-01	ACCESS PANEL (BEIGE) KIT	1	
25	1015829-02	ACCESS PANEL (BLACK) KIT	1	
26	1013677	BATTERY DANGER DECAL		1
27	1013496	RESISTOR WARNING DECAL		1
28	1012412	HINGE PLATE	2	2
29	332	FLATWASHER, 1/4"	4	4
30	1017141	BODY SUPPORT — FRONT (NOT SHOWN)	1	1
31	1016952	1/4-20 U-NUT	2	2
32	1014415	1/4-20 X 3/4" TORX TRUSS HEAD SCREW	2	2
33	8251	1/4-20 X 1" PHILLIPS HEAD SCREW	4	4

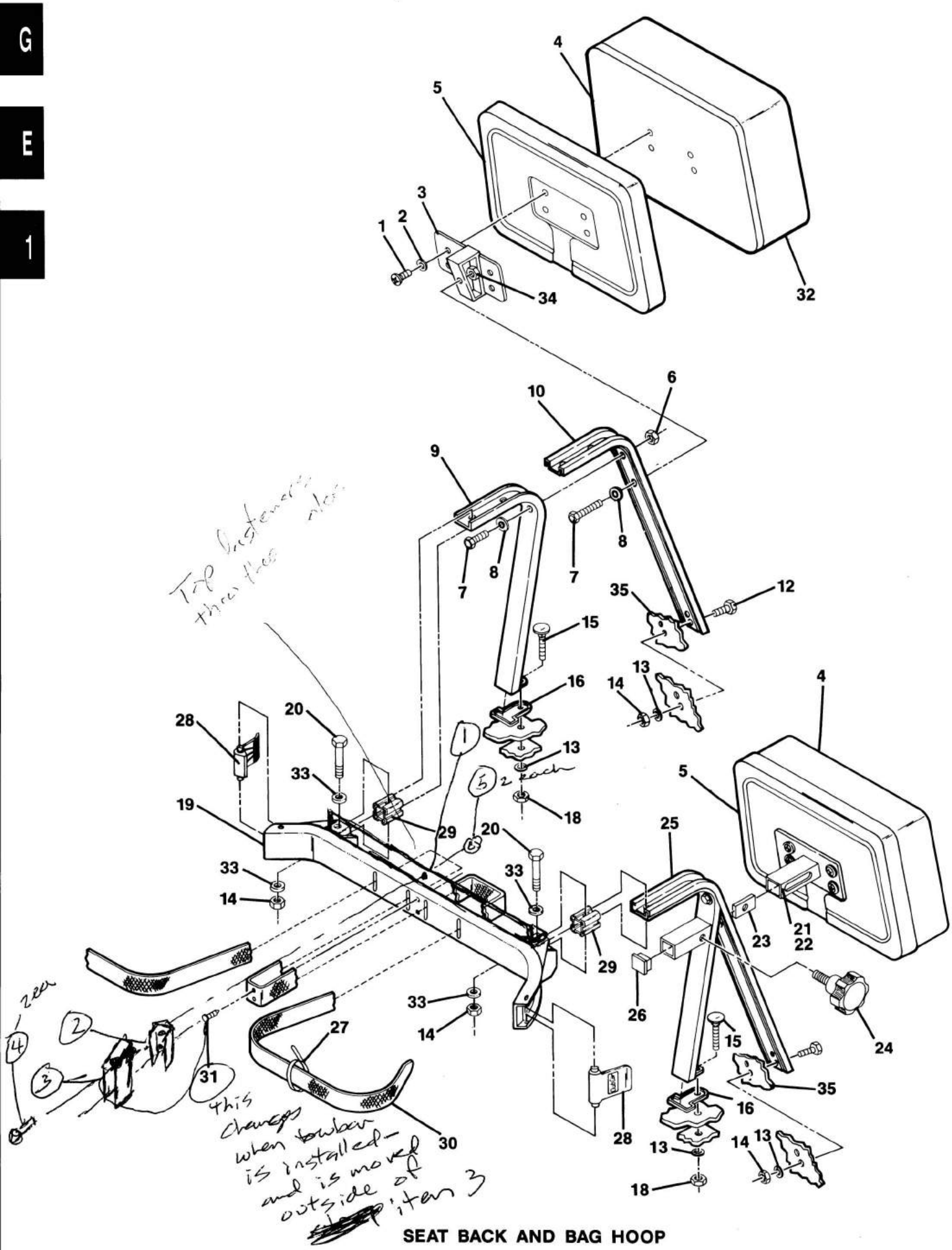

SEAT BACK AND BAG HOOP

SEAT BACK AND BAG HOOP

ITEM NUMBER	PART NUMBER	1 2 3 4 DESCRIPTION	UNITS PER VEHICLE GAS	UNITS PER VEHICLE ELECTRIC
1	8248	SCREW, 1/4-20 X 3/4"	8	8
2	8304	LOCKWASHER, 1/4" INTERNAL TOOTH	8	8
3	1011716	PLATE MOUNTING ASSEMBLY	2	2
4	1015651-02	SEAT BACK ASSEMBLY — THICK BUNN (WHITE WITH BLACK CAP) INCLUDES ITEM 5	2	2
4	1015651-03	SEAT BACK ASSEMBLY — THICK BUNN (NON-STANDARD WITH BLACK CAP) INCLUDES ITEM 5	2	2
4	1015651-04	SEAT BACK ASSEMBLY — THICK BUNN (WHITE WITH TAN CAP) INCLUDES ITEM 5	2	2
4	1015651-05	SEAT BACK ASSEMBLY — THICK BUNN (BUFF WITH BLACK CAP) INCLUDES ITEM 5	2	2
5	1011231	CAP, SEAT BACK (TAN)	2	2
5	1013938	CAP, SEAT BACK (BROWN)	2	2
5	1013335	CAP, SEAT BACK (BLACK)	2	2
6	8233	LOCKNUT, 1/4-20 NYLON	2	2
7	7847	BOLT, HEX HEAD, 1/4-20 X 3/4"	4	4
8	332	FLATWASHER, 1/4"	6	6
9	1011710	KNEE BRACE WELD ASSEMBLY	2	2
10	1011708	MAIN SEAT BACK SUPPORT	2	2
12	1010577	BOLT, HEX HEAD, 5/16-18 X 1-1/2"	4	4
13	1241	FLATWASHER, 5/16"	6	6
14	7473	LOCKNUT, 5/16-18 NYLON	8	8
15	7818	BOLT, 5/16-18 X 1-1/2" CARRIAGE	2	2
16	1011706	MOUNTING PAD	2	2
18	1242	NUT, HEX, 5/16-18	2	2
19	1013935	BAG HOOP ASSEMBLY INCLUDES ITEMS 28, 30 AND 31	1	1
20	1017182	BOLT, HEX HEAD, 5/16-18 X 2-1/4" (BLACK)	2	2
21	1011794	ADJUSTABLE SEAT BACK KIT (OPTION) INCLUDES ITEMS 22-26	A/R	A/R
22	1011752	MOUNTING PLATE WELD ASSEMBLY	2	2
23	1010322	SEAT ADJUSTER LOCK	2	2
24	1011761	SEAT ADJUSTER KNOB	2	2
25	NO #	ADJUSTABLE SEAT BACK WELD ASSEMBLY (SEE ITEM 21)	2	2
26	1011760	TUBE PLUG	2	2
27	8639	TIE WRAP	1	1
28	1013754	BUCKLE	2	2
29	1013884	SPACER, BAG HOOP	2	2
30	1010413	BELT STRAP ASSEMBLY	1	1
31	1010434	PLASTIC BARRELS (BLACK)	2	2
32	1015626-01	VINYL COVER - SEAT BACK (BUFF)	A/R	A/R
32	1015626-02	VINYL COVER - SEAT BACK (WHITE)	A/R	A/R
32	1015626-03	VINYL COVER - SEAT BACK (NON-STANDARD)	A/R	A/R
33	1017173	FLATWASHER, 5/16" (BLACK)	4	4
34	1015661	1/4-20 FLANGE LOCKNUTS	2	2
35	1017138	BODY SUPPORT — REAR	1	1

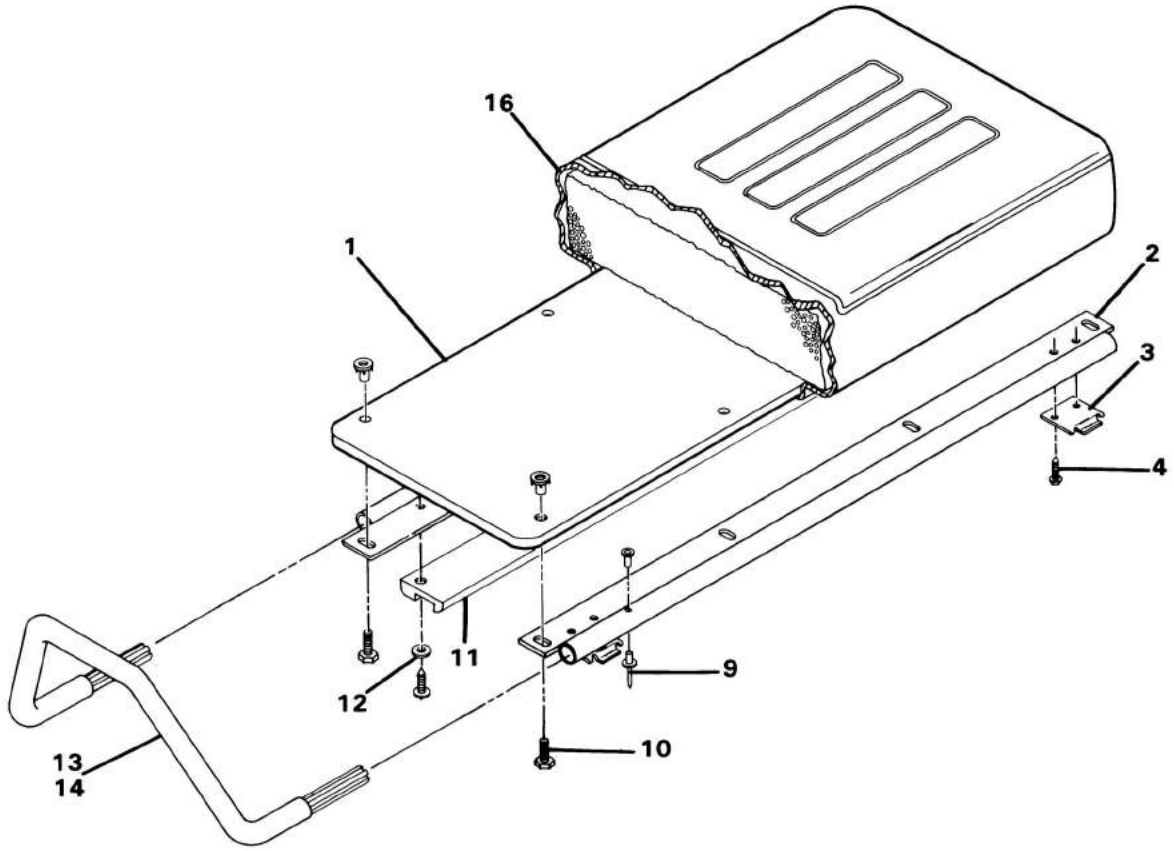

SEAT BOTTOM AND ARMREST — ELECTRIC VEHICLE

ITEM NUMBER	PART NUMBER	1 2 3 4 DESCRIPTION	UNITS PER VEHICLE
1	1015648-04	SEAT BOTTOM ASSEMBLY, (BUFF)	1
1	1015648-05	SEAT BOTTOM ASSEMBLY, (WHITE)	1
1	1015648-06	SEAT BOTTOM ASSEMBLY, (NON-STANDARD)	1
2	1015625	BRACKET, SEAT SUPPORT	2
3	1011652	PLATE, SEAT HINGE	2
4	1011451	SCREW, #12 TYPE AB	9
9	1012327	RIVET, 3/16" MATING	4
10	304	BOLT, 1/4-20 HEX	8
11	1012597	BUMPER, SEAT	1
12	183	WASHER, #10 FLAT	3
13	1011786	LEFT ARMREST ASSEMBLY	1
14	1011780	RIGHT ARMREST ASSEMBLY	1
15	1015670	ARMREST SEAT BOTTOM ASSEMBLY KIT INCLUDES ITEMS 2, 9, 13 AND 14	1
16	1015627-01	VINYL COVER - SEAT BOTTOM (BUFF)	A/R
16	1015627-02	VINYL COVER - SEAT BOTTOM (WHITE)	A/R
16	1015627-03	VINYL COVER - SEAT BOTTOM (NON-STANDARD)	A/R

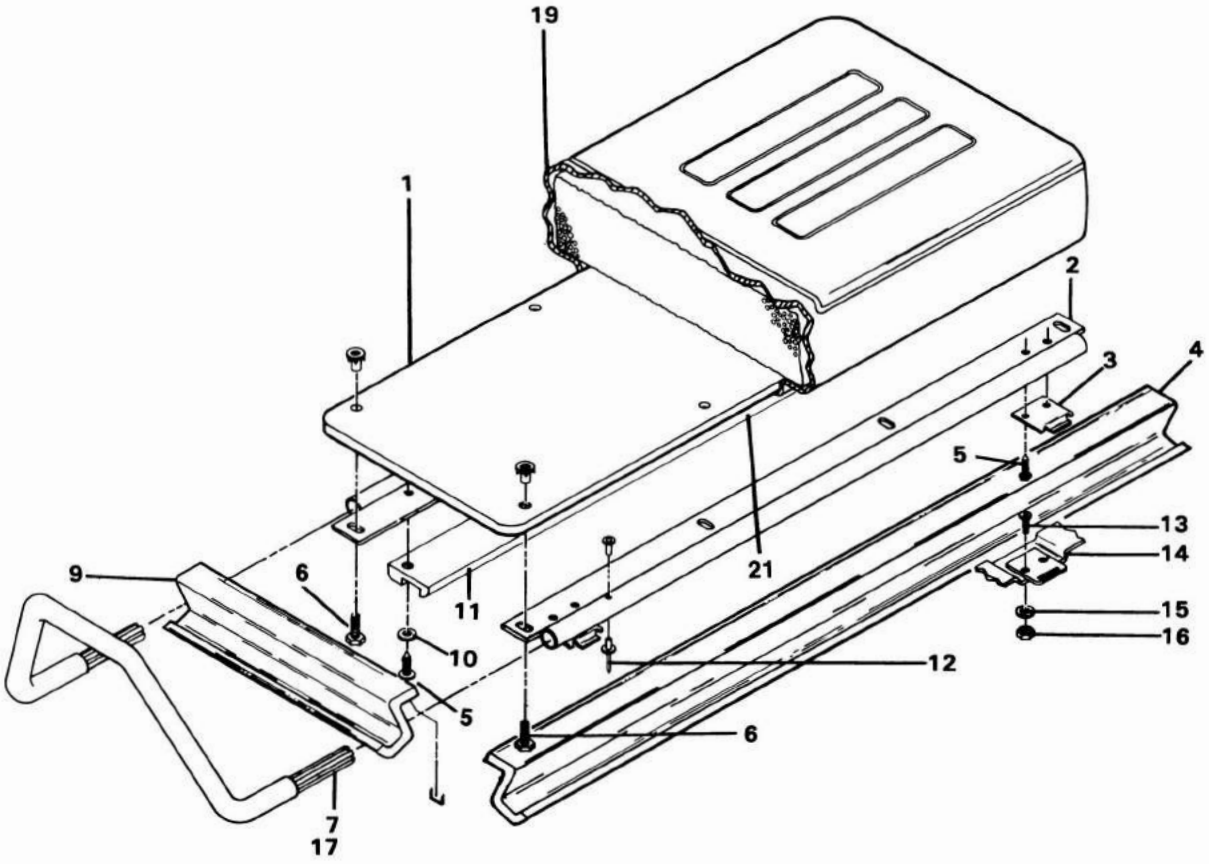

SEAT BOTTOM AND ARMREST ASSEMBLY — GAS VEHICLE

ITEM NUMBER	PART NUMBER	1 2 3 4 DESCRIPTION	UNITS PER VEHICLE
1	1015648-04	SEAT BOTTOM ASSEMBLY (BUFF)	1
1	1015648-05	SEAT BOTTOM ASSEMBLY (WHITE)	1
1	1015648-06	SEAT BOTTOM ASSEMBLY (NON STANDARD)	1
2	1015625	BRACKET, SEAT SUPPORT	2
3	1011652	PLATE, SEAT HINGE	2
4	1012657	GASKET, SEAT (LONG)	1
5	1011451	SCREW, #12 TYPE AB	9
6	304	BOLT, 1/4-20 HEX	8
7	1011786	LEFT ARMREST ASSEMBLY	1
9	1012656	GASKET, SEAT (SHORT)	2
10	183	WASHER, #10 FLAT	5
11	1012597	BUMPER, SEAT	1
12	1012327	RIVET, 3/16 MATING	4
13	8251	SCREW, 1/4-20 PHILLIPS HEAD	4
14	1012412	PLATE, BODY HINGE	2
15	332	WASHER, 1/4 FLAT	4
16	8233	NUT, 1/4-20 NYLON LOCK	4
17	1011780	RIGHT ARMREST ASSEMBLY	1
19	1015627-01	VINYL COVER - SEAT BOTTOM (BUFF)	A/R
19	1015627-02	VINYL COVER - SEAT BOTTOM (WHITE)	A/R
19	1015627-03	VINYL COVER - SEAT BOTTOM (NON STANDARD)	A/R
20	1015670	ARMREST SEAT BOTTOM ASSEMBLY KIT INCLUDES ITEMS 2, 12, 7 AND 17	1
21	1015417	SOUND INSULATION (NOT SHOWN)	1
22	1016623	INSULATION RETAINER (NOT SHOWN)	2

Section 2

DRIVE UNIT

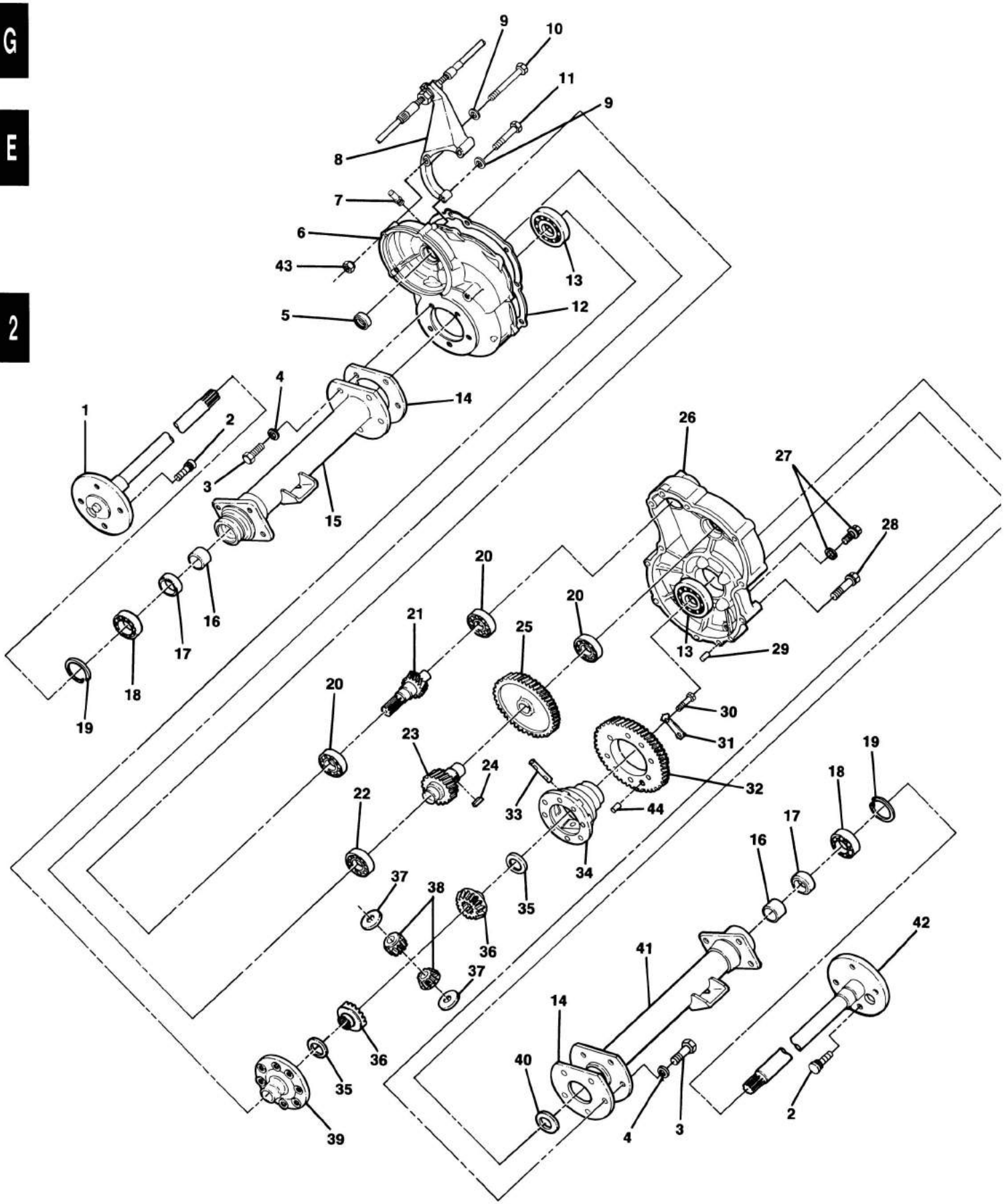
9
10
11
9
8
7
6
43
13
5
12
4
14
1
2
3
15
26
27
28
20
20
21
25
16
17
18
19
13
29
20
30
31
23
24
32
19
18
22
33
44
17
16
34
37
38
35
36
42
41
37
14
36
40
35
39
4
3
2

DRIVE UNIT

DRIVE UNIT

ITEM NUMBER	PART NUMBER	1 2 3 4 DESCRIPTION	UNITS PER VEHICLE
	1013664	DRIVE UNIT INCLUDES ALL ITEMS EXCEPT 8, 9, 10, 11 AND 43	1
1	1013785	AXLE ASSEMBLY, RIGHT INCLUDES ITEMS 2, 16, 18 AND 19	1
2	1013787	LUG STUD	8
3	1013790	BOLT (10 X 30)	10
4	1013791	LOCKWASHER	10
5	1013775	INPUT SHAFT OIL SEAL	1
6	1013756	GEAR CASE — RIGHT HAND	1
7	1012711	BREATHER PLUG	1
8	1013866	SHIFT CABLE SUPPORT BRACKET KIT (GAS VEHICLE ONLY) INCLUDES ITEMS 9, 10, 11 AND 43	1
9	332	1/4" FLATWASHER	6
10	1013872	1/4-20 X 4" HEX BOLT	2
11	1012462	1/4-20 X 3-1/2" HEX BOLT	1
12	1013758	GASKET	1
13	7330	INNER AXLE, TUBE BEARING	2
14	1013789	GASKET — AXLE TUBE	2
15	1014209	AXLE TUBE ASSEMBLY — RIGHT HAND	1
16	1014207	BUSHING WITH GROOVE IN END	1
17	1013794	AXLE SHAFT OIL SEAL	2
18	1011291	OUTER AXLE TUBE BEARING	2
19	1013792	CIRCLIP, TYPE-C	2
20	7335	INPUT GEAR BEARING	3
21	1013764	SHAFT, INPUT	1
22	7336	INTERMEDIATE GEAR BEARING	1
23	1013766	INTERMEDIATE GEAR — SMALL	1
24	1013780	KEY, SUNK	1
25	1013765	INTERMEDIATE GEAR — LARGE	1
26	1013757	GEAR CASE — LEFT HAND	1
27	1013759	FILL PLUG WITH GASKET	2
28	1013763	BOLT (6 X 50)	10
29	1012710	PIN, DOWEL	2
30	1013779	BOLT (8 X 37)	8
31	1013782	PLATE, LOCK	4
32	1013767	OUTPUT GEAR	1
33	1013772	DIFFERENTIAL PIN	1
34	1013768	DIFFERENTIAL GEAR CASE — LEFT HAND	1
35	1013773	PLATE, THRUST (DIFFERENTIAL GEAR)	2
36	1013771	DIFFERENTIAL GEAR	2
37	1013774	PLATE, THRUST (IDLER GEAR)	2
38	1013770	DIFFERENTIAL IDLER GEAR	2
39	1013769	DIFFERENTIAL GEAR CASE — RIGHT HAND	1
40	1013781	SHIM	A/R
41	1014210	AXLE TUBE ASSEMBLY — LEFT HAND	1
42	1013786	AXLE ASSEMBLY, LEFT INCLUDES ITEMS 2, 16, 18 AND 19	1
43	8233	1/4-20 NYLON LOCKNUT	3
44	1014193	PIN, DOWEL	1

G

E

2

Section 3

BRAKES, PEDAL AND CABLE ASSEMBLY

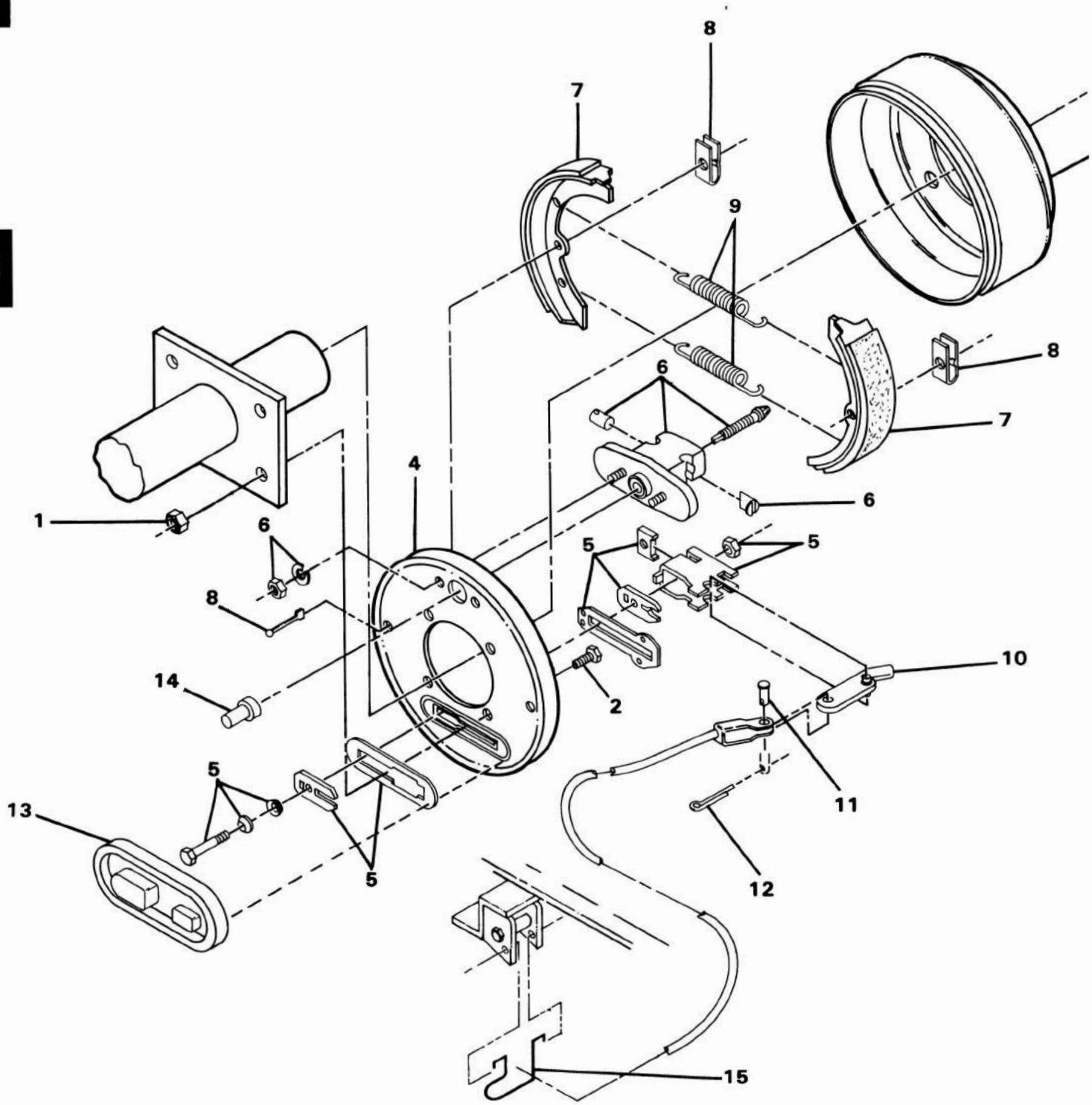

BRAKE CLUSTER, RIGHT HAND AND LEFT HAND

BRAKE CLUSTER, RIGHT HAND AND LEFT HAND

ITEM NUMBER	PART NUMBER	1 2 3 4 DESCRIPTION	UNITS PER VEHICLE
	1011146	RIGHT HAND BRAKE CLUSTER COMPLETE INCLUDES ITEMS 4 THRU 14	1
	1011145	LEFT HAND BRAKE CLUSTER COMPLETE INCLUDES ITEMS 4 THRU 14	1
1	1013924	LOCKNUT, 5/16-24, GRADE 8	8
2	1014153	BOLT, BRAKE CLUSTER MOUNTING	8
3	1011137	DRUM, BRAKE	2
4	1011494	PLATE BACKING, LEFT HAND	1
4	1011154	PLATE BACKING, RIGHT HAND	1
5	1011465	BRAKE ACTUATOR KIT	1
6	1011467	ANCHOR BODY KIT	1
7	1011463	BRAKE SHOE PACKAGE (4 PIECES)	1
8	1011466	SHOE RETAINER KIT	1
9	1011464	BRAKE SPRING PACKAGE	1
10	1011297	ARM, BRAKE LEVER	2
11	1010829	PIN, 5/16" CLEVIS	2
12	1035	PIN, COTTER	2
13	1010850	COVER, DUST	2
14	1011303	CAP, ADJUSTMENT BOLT	2
15	1013207	BRAKE CABLE HANGER	2

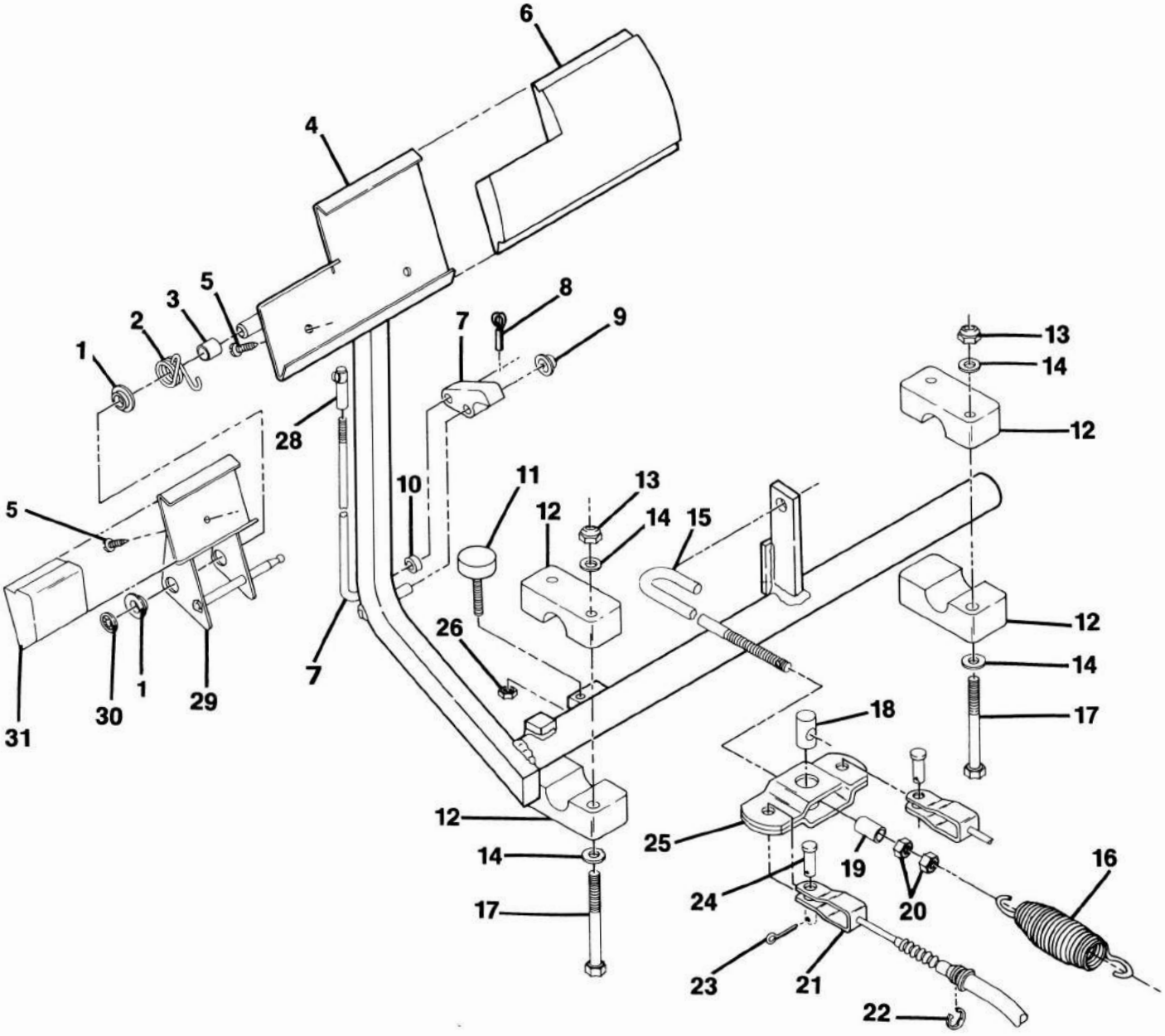

BRAKE PEDAL AND CABLE ASSEMBLY

BRAKE PEDAL AND CABLE ASSEMBLY

ITEM NUMBER	PART NUMBER	1 2 3 4 DESCRIPTION	UNITS PER VEHICLE
1	1032	NYLON BUSHING	2
2	1010933	TORSION SPRING	1
3	1010927	HILL BRAKE SPACER	1
4	1011406	BRAKE PEDAL KIT	1
		INCLUDES ITEMS 5 & 6	
5	7716	SCREW, NO. 10-16 SHEET METAL	6
6	1013869	BRAKE PEDAL PAD	1
7	1016173	HILL BRAKE ROD AND PAWL KIT	1
		INCLUDES ITEMS 7, 8, 9 AND 10	
8	1017029	PIN - COTTER, 7/64 X 1/2", 302 STAINLESS STEEL	1
9	1010877	NUT, 5/16 PUSH	1
10	1010805	HILL BRAKE ROD SLEEVE	1
11	1010878	BRAKE STOP	1
12	1011402	BRAKE MOUNTING BLOCK PACKAGE	1
13	7473	NUT, 5/16-18 NYLON LOCK	4
14	1241	WASHER, 5/16 FLAT	8
15	1010808	EQUALIZER ROD	1
16	1013532	SPRING, BRAKE RETURN (GAS VEHICLE)	1
16	1013531	SPRING, BRAKE RETURN (ELECTRIC VEHICLE)	1
17	1010921	BOLT, 5/16-18 HEX	4
18	1016320	LIMITER EQUALIZER PIVOT	1
19	1013855	SPACER EQUALIZER	1
20	1242	NUT, 5/16-18 HEX	2
21	1011403	BRAKE CABLE KIT	2
		INCLUDES ITEMS 22, 23, 24	
22	1011779	RING, "E"	4
23	1035	PIN, COTTER	2
24	1010829	PIN, 5/16 CLEVIS	2
25	1016319	EQUALIZER WELD ASSEMBLY	1
26	1028	NUT, 1/4-20 HEX	1
28	1010932	BALL JOINT, 1/4-28	1
29	1011418	HILL BRAKE KIT	1
		INCLUDES ITEMS 1, 5, 29, 30, 31	
30	1013876	NUT, 3/8 PUSH	1
31	1013870	PAD, HILL BRAKE	1
32	1017211	EQUALIZER AND PIVOT LIMITER KIT	1
		INCLUDES ITEMS 18 AND 25	

ELECTRIC VEHICLE ONLY

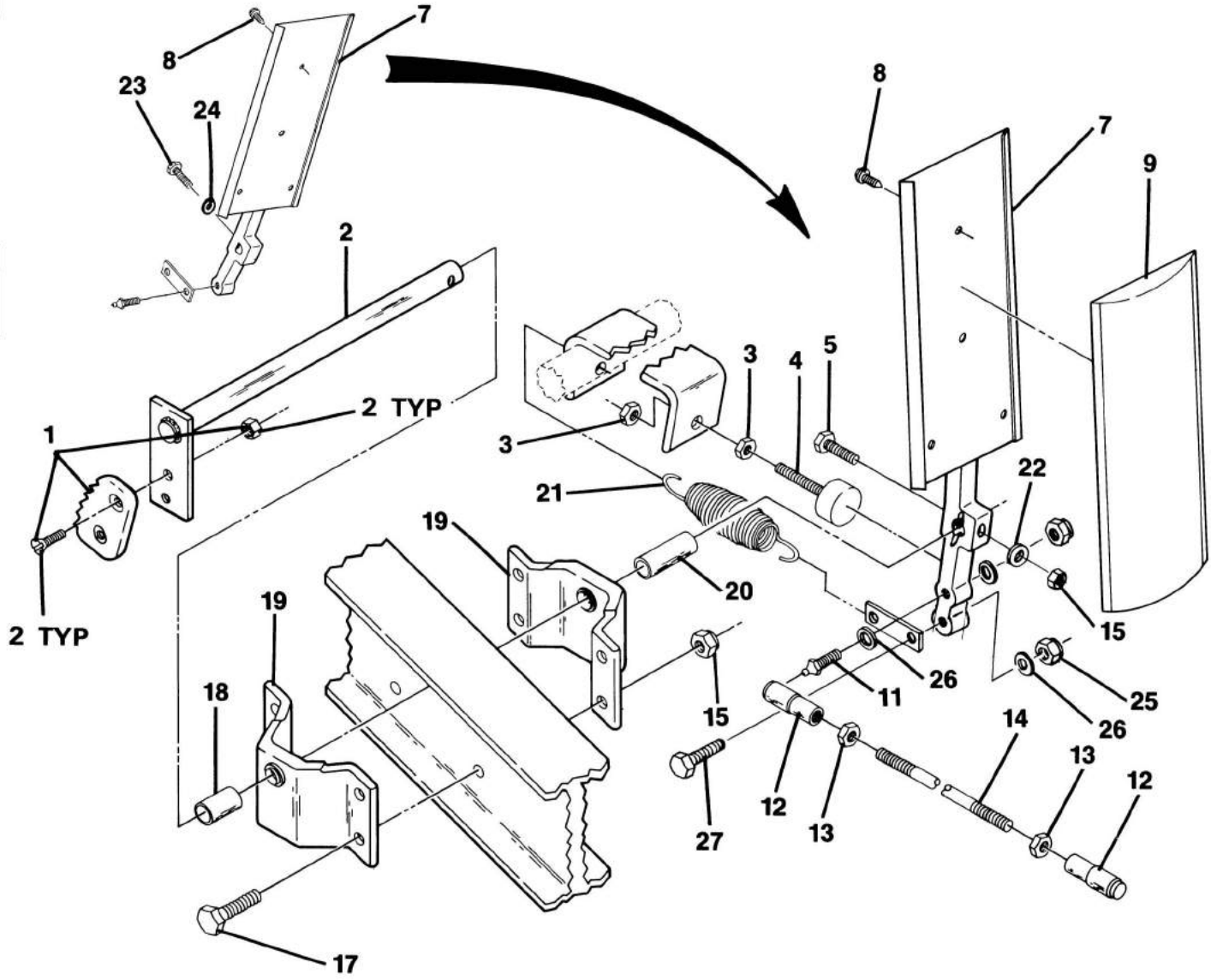

ACCELERATOR PEDAL ASSEMBLY

ACCELERATOR PEDAL ASSEMBLY

ITEM NUMBER	PART NUMBER	1 2 3 4 DESCRIPTION	UNITS PER VEHICLE
1	1011877	LATCH, HILL BRAKE	1
2	1016166	ROD, ACCELERATOR PIVOT (GAS VEHICLE)	1
2	1016116	ROD, ACCELERATOR PIVOT (ELECTRIC VEHICLE)	1
3	1028	NUT, 1/4-20 HEX	2
4	1010878	STOP, BRAKE	1
5	1016619	BOLT, 1/4-20 HEX	1
6	1014007	1/4" FLATWASHER	1
7	1016377-01	ACCELERATOR PEDAL ASSEMBLY (GAS VEHICLE) INCLUDES ITEMS 8, 9, 10, 11, 25, 26, AND 27	1
7	1010969	ACCELERATOR PEDAL ASSEMBLY (ELECTRIC VEHICLE) INCLUDES ITEMS 8, 9, 10, AND 11	1
8	7716	SCREW, #10-16 SHEET METAL	4
9	1013871	PAD, ACCELERATOR	1
10	1011691	HANGER, ACCELERATOR PEDAL SPRING	1
11	1016157	BALL STUD, 1/4-28 X 1.00 (GAS VEHICLE)	1
11	1010954	BALL STUD, 1/4-28 (ELECTRIC VEHICLE)	1
12	1011734	BALL JOINT, 1/4-28 SPRING LOADED	2
13	1011084	NUT, 1/4-28 JAM	2
14	1014085	ROD, ACCELERATOR (ELECTRIC VEHICLE) INCLUDES ITEMS 12 AND 13	1
14	1016168	ROD, ACCELERATOR (GAS VEHICLE) INCLUDES ITEMS 12 AND 13	1
15	8233	LOCKNUT, 1/4-20 NYLON	5
17	7479	BOLT, 1/4-20 HEX	4
18	1011699	SPACER, 1/2"	1
19	1011694	BRACKET, ACCELERATOR BEARING	2
20	1011700	SPACER, ACCELERATOR	1
21	1012075	SPRING EXTENSION	1
22	332	1/4" FLATWASHER	1
23	403	BOLT, 1/4"-20 HEX (ELECTRIC VEHICLE ONLY)	1
24	8304	WASHER, 1/4" INTERNAL TOOTH LOCK (ELECTRIC VEHICLE ONLY)	1
25	8717	1/4-28 NYLON HEX NUT (GAS VEHICLE)	2
26	1014007	1/4 FLATWASHER (GAS VEHICLE)	3
27	7510	1/4-28 X 1-1/4 HEX CAP SCREW (GAS VEHICLE)	1

Section 4

STEERING AND FRONT SUSPENSION

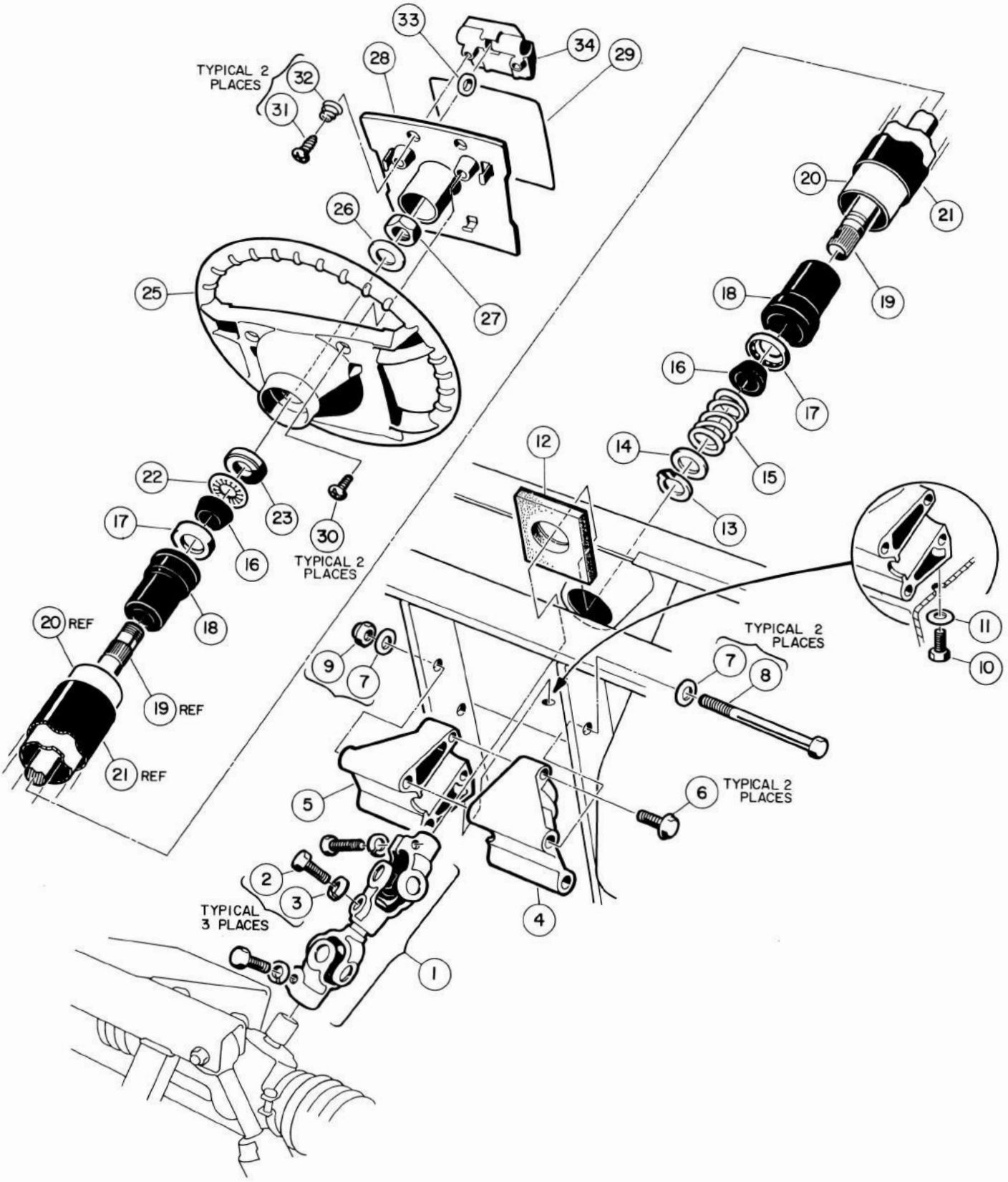

STEERING COLUMN — ALUMINUM

STEERING COLUMN — ALUMINUM

ITEM NUMBER	PART NUMBER	1 2 3 4 DESCRIPTION	UNITS PER VEHICLE
1	1013861	COMPOUND STEERING JOINT INCLUDES ITEMS 2 AND 3	1
2	1017226	HEX HEAD BOLT, 8MM	3
3	7174	LOCKWASHER, 5/16" DIAMETER	
4	1016185	STEERING COLUMN MOUNT, LEFT HAND	1
5	1016184	STEERING COLUMN MOUNT, RIGHT HAND	1
6	1016269	HEX WASH HEAD THREAD FORMING SCREW, 5/16-18 X 2	2
7	334	FLATWASHER, 3/8" DIAMETER	4
8	1016183	HEX HEAD BOLT, 3/8-16 X 6-1/2	2
9	8754	NYLON LOCKNUT, 3/8-16	2
10	1014288	HEX HEAD THREAD FORMING SCREW, 5/16-18 X 3/4	2
11	1011697	FLATWASHER, 5/16" DIAMETER	1
12	1012499	DUST BOOT	1
13	1012605	RETAINING RING	1
14	1012604	WASHER	1
15	1014217	SPRING	1
16	1014125	WEDGE	2
17	1014213	BEARING ASSEMBLY	2
18	1014126	BEARING SEAT	2
19	1015545	STEERING SHAFT	1
20	1016622	STEERING TUBE	1
21	1016263	STEERING TUBE COVER	1
22	1014214	RETAINING RING	1
23	1014211	BEARING SEAL	1
25	1016156	STEERING WHEEL	1
26	1012604	FLATWASHER, 5/8" DIAMETER	1
27	7278	HEX JAM NUT, 5/8-18	1
28	1016219	SCORE CARD PLATE ASSEMBLY INCLUDES ITEMS 28 AND 31 THRU 34	1
29	1016216	OPERATING INSTRUCTIONS DECAL	1
30	1010715	TRI-LOBULAR SCREW, #10-14	4
31	1012565	SCREW, #12	2
32	1012566	SPRING	2
33	1016214	PENCIL GRIP	1
34	1016154	SCORE CARD CLIP	1
	1016181	STEERING COLUMN ASSEMBLY INCLUDES ITEMS 13 THRU 20, 22 AND 23	

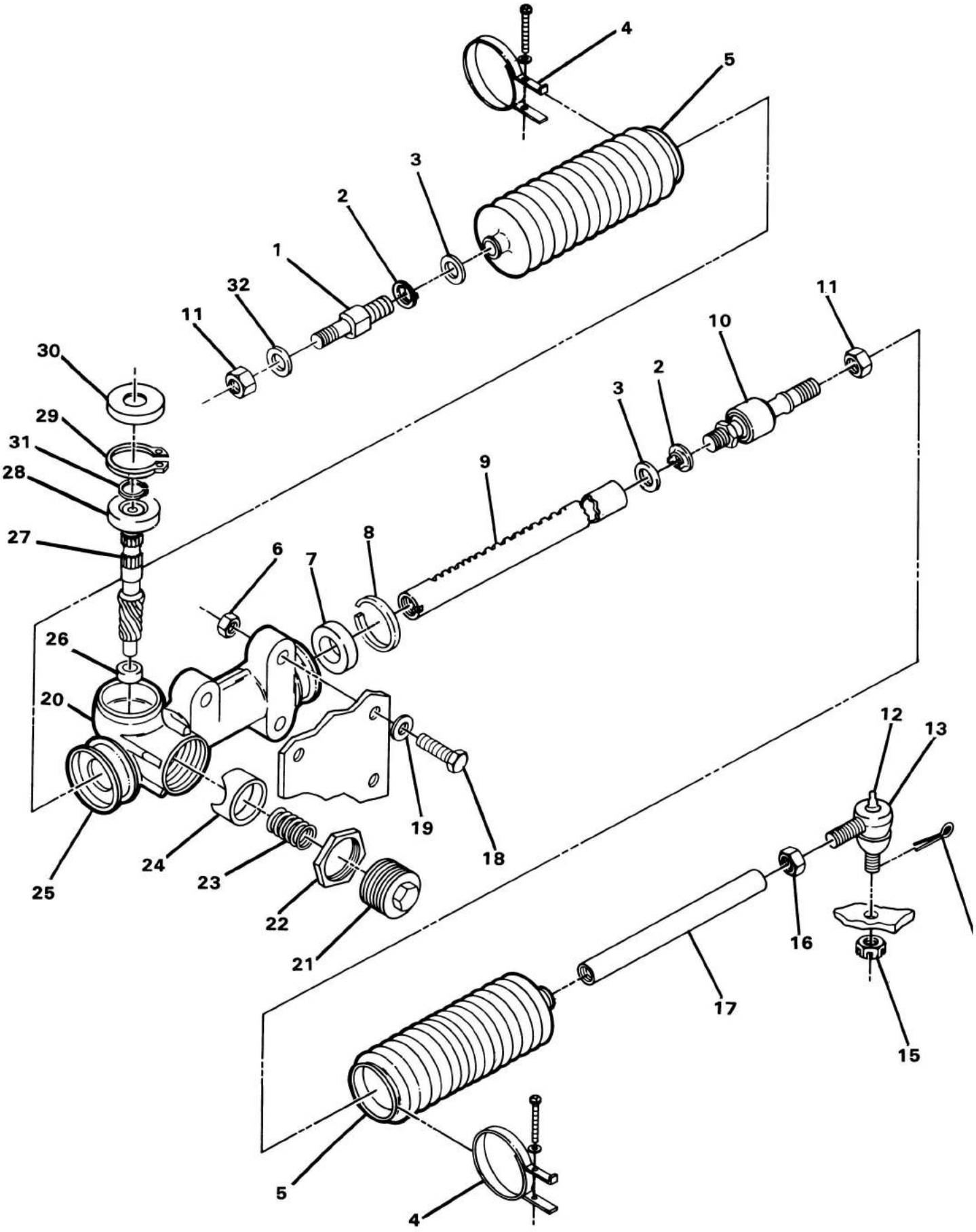

STEERING ASSEMBLY

STEERING ASSEMBLY

ITEM NUMBER	PART NUMBER	1 2 3 4 DESCRIPTION	UNITS PER VEHICLE
1	1013053	BOLT, STOPPER, 12MM	1
2	1013040	LOCKWASHER, TIE ROD	2
3	1013039	WASHER, TIE ROD STOPPER	2
4	1013034	BAND, BELLOWS	2
5	1013035	SEAL, DUST	2
6	1010138	LOCKNUT, 3/8-16	3
7	1013036	BUSHING, RACK	1
8	1013037	RING, SNAP	1
9	NO #	RACK, STEERING (SEE ITEM 20)	1
10	1013041	END, RACK	1
11	1013042	NUT, HEX, 12MM	2
12	1015597	FITTING, GREASE	1
13	7540	SOCKET, VERTICAL, LEFT HAND INCLUDES ITEMS 12 AND 15	1
14	1035	PIN, COTTER	1
15	7602	NUT, HEX, SLOTTED, 3/8-24	1
16	7555	NUT, LEFT HAND, JAM, 1/2-20	1
17	1012467	LINK, DRAG	1
18	1624	BOLT, HEX, 3/8-16	3
19	334	FLATWASHER, 3/8	3
20	1012452	STEERING GEAR BOX ASSEMBLY INCLUDES ITEMS 1 THRU 5, 7 THRU 11 AND 21 THRU 30	1
21	1013043	SCREW, RACK GUIDE	1
22	1013044	LOCKNUT, RACK SCREW	1
23	1013045	SPRING, RACK GUIDE PRESSURE	1
24	1013046	GUIDE, STEERING RACK	1
25	1013047	BOX, STEERING GEAR	1
26	1013048	BUSHING, PINION	1
27	NO #	PINION, STEERING (SEE ITEM 20)	1
28	1012884	BALL BEARING	1
29	1013051	RING-RETAINING, INTERNAL	1
30	1013052	DUST SEAL, STEERING PINION	1
31	1013031	RING-RETAINING, EXTERNAL	1
32	1013030	WASHER, END	1
33	1011930	DUST SEAL	1

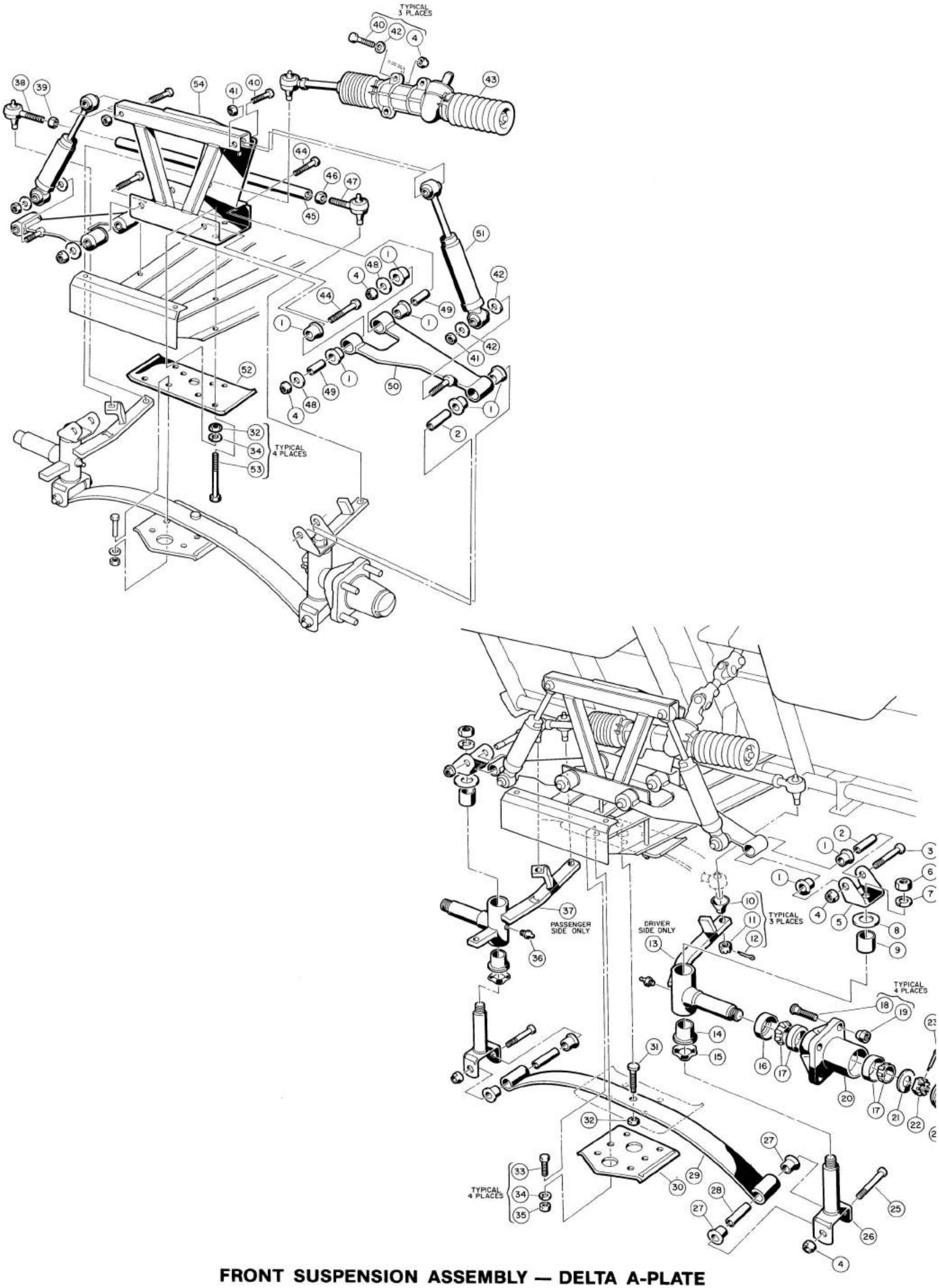

FRONT SUSPENSION ASSEMBLY — DELTA A-PLATE

FRONT SUSPENSION ASSEMBLY — DELTA A-PLATE

ITEM NUMBER	PART NUMBER	1 2 3 4 DESCRIPTION	UNITS PER VEHICLE
1	1016346	URETHANE BUSHING	12
2	1016350	DELTA OUTER SLEEVE	2
3	1016387	HEX HEAD BOLT, 3/8-16 X 2-3/4 LONG	2
4	8754	NYLON LOCKNUT, 3/8-16	11
5	1016384	UPPER DELTA CLEVIS	2
6	1308	HEX NUT, 1/2-20	2
7	209	LOCKWASHER, 1/2 DIAMETER	2
8	1010150	THRUST WASHER	2
9	8067	SPINDLE BUSHING	2
10	1011930	DUST BOOT	3
11	7602	HEX NUT, SLOTTED, 3/8-24	3
12	1035	COTTER PIN, 3/32 DIAMETER X 1 LONG	3
13	1010342	SPINDLE SUB ASSEMBLY, LEFT HAND	1
14	7048	BRONZE BUSHING	2
15	1016389	KINGPIN WAVE WASHER	2
16	1013135	DUST SEAL	2
17	1011393	HUB BEARING	4
18	1011304	LUG STUD	8
19	1011390	LUG NUT	8
20	1011153	HUB	2
21	1010005	FLATWASHER, 3/4 DIAMETER	2
22	7840	HEX NUT, SLOTTED, 3/4-16	2
23	7910	COTTER PIN	2
24	1011887	DUST COVER	2
25	8755	HEX HEAD BOLT, 3/8-16 X 3-3/8 LONG	2
26	1016386	KINGPIN ASSEMBLY	2
27	1015583	URETHANE BUSHING	4
28	1012303	STEEL BUSHING	2
29	1015108	TAMPERED LEAF SPRING (GAS VEHICLE)	1
29	1012030	TAMPERED LEAF SPRING (ELECTRIC VEHICLE)	1
30	1014276	RETAINER PLATE	1
31	8745	ADJUSTMENT ECCENTRIC	1
32	706	HEX NUT, 3/8-16	5
33	1624	HEX HEAD BOLT, 3/8-16 X 1-1/2 LONG	4
34	357	LOCKWASHER, 3/8 DIAMETER	8
35	706	HEX NUT, 3/8-16	4
36	1015597	GREASE FITTING	2
37	1010344	SPINDLE SUB ASSEMBLY, RIGHT HAND	1
	1011894	HUB ASSEMBLY	
		INCLUDES ITEMS 17, 18 AND 20	
	1015828	FRONT SPRING ASSEMBLY	
		INCLUDES ITEMS 29, 31 AND 32	
38	1011893	BALL JOINT, RIGHT HAND	1
39	1308	HEX NUT, 1/2-20, RIGHT HAND	1
40	1624	HEX HEAD BOLT, 3/8-16 X 1-1/2	5
41	1010138	DIMPLED LOCKNUT, 3/8-16	4
42	334	FLATWASHER, 3/8 DIAMETER	7
43	1012485	GEAR AND SOCKET ASSEMBLY	1
44	2402	HEX HEAD BOLT, 3/8-16 X 2-1/4	4
45	1010219	TIE ROD	1
46	7555	HEX NUT, 1/2-20, LEFT HAND	1
47	1011895	BALL JOINT, LEFT HAND	1
48	808	FLATWASHER, TYPE B, 3/8 DIAMETER	4
49	1016349	DELTA INNER SLEEVE	4
50	1016351	DELTA A-PLATE	2
51	1015813	FRONT SHOCK ABSORBER (GAS VEHICLE)	2
51	1014235	FRONT SHOCK ABSORBER (ELECTRIC VEHICLE)	2
52	1010124	SPRING MOUNTING PLATE	1
53	1010200	HEX HEAD BOLT, 3/8-16 X 4-1/4	4
54	1016385	SHOCK SUPPORT	1

Section 5

ELECTRICAL AND BATTERY

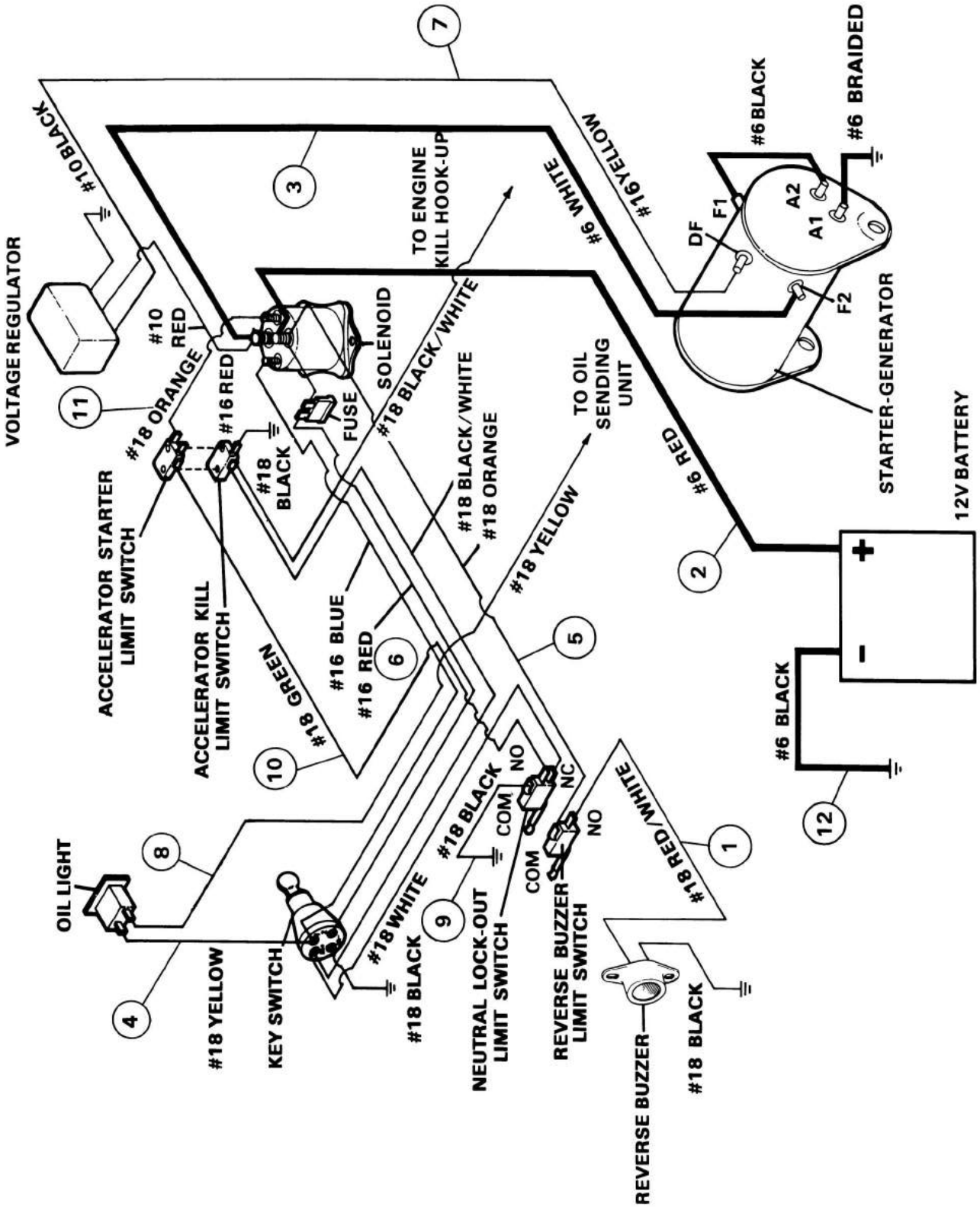

WIRING — GAS VEHICLE

WIRING — GAS VEHICLE

ITEM NUMBER	PART NUMBER	1 2 3 4 DESCRIPTION	UNITS PER VEHICLE
	1015735	WIRE HARNESS ASSEMBLY	1
1	1013723	WIRE ASSEMBLY, #18 RED/WHITE	1
2	1014119	WIRE ASSEMBLY, #6 RED	1
3	1015769	WIRE ASSEMBLY, #6 WHITE	1
4	1013601	WIRE ASSEMBLY, #18 YELLOW	1
5	1015831	WIRE ASSEMBLY, #18 ORANGE	1
6	1015736	WIRE ASSEMBLY, #16 RED	1
7	1015738	WIRE ASSEMBLY, #16 YELLOW	1
8	1015740	WIRE ASSEMBLY, #18 YELLOW	1
9	1015780	WIRE ASSEMBLY, #18 BLACK	1
10	1015779	WIRE ASSEMBLY, #18 GREEN	1
11	1015767	WIRE ASSEMBLY, #18 ORANGE	1
12	1012382	WIRE ASSEMBLY, #6 BLACK	1

NOTE: ITEM #30 BOX COVER MOUNTING SCREW NOT SHOWN

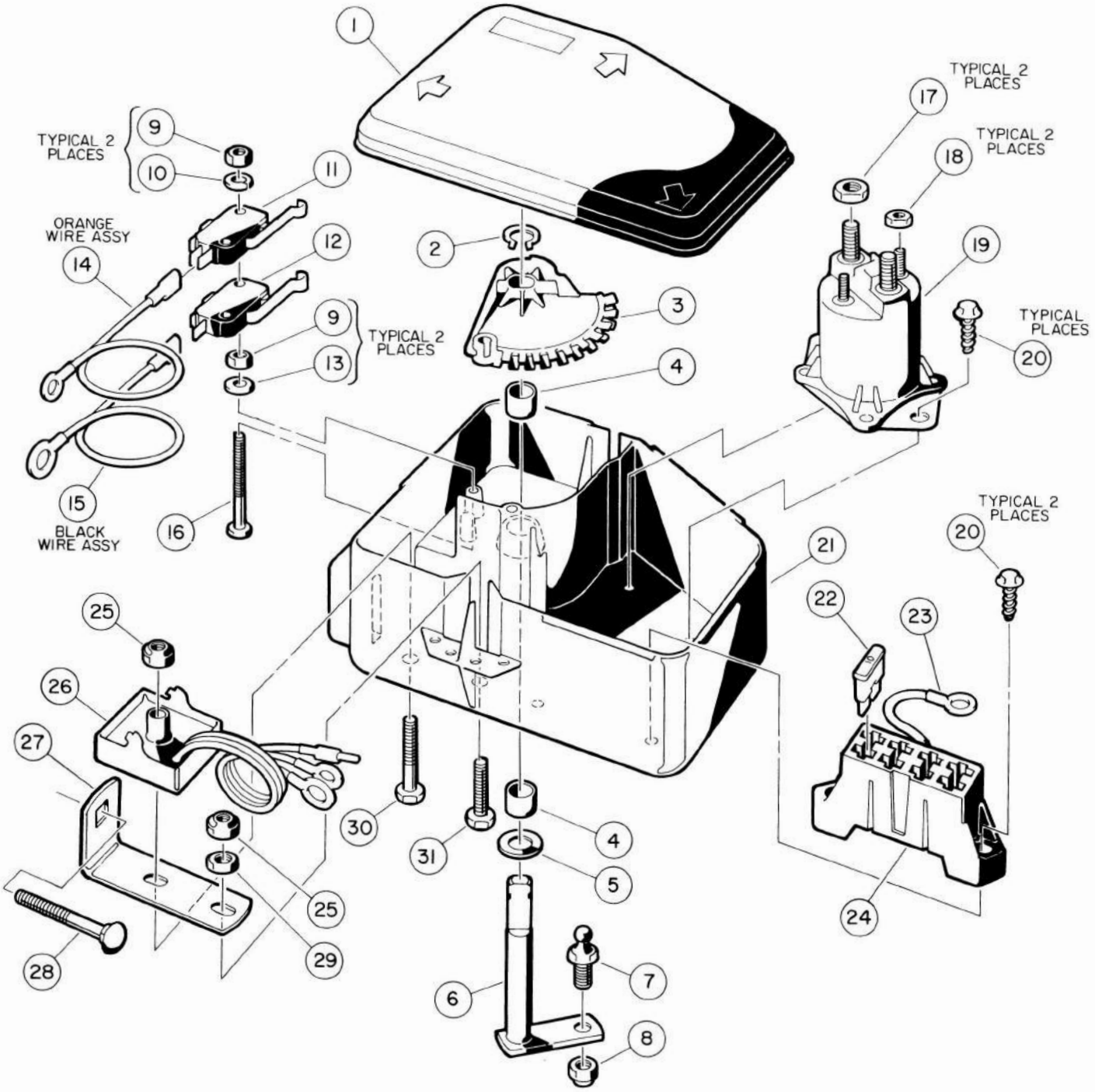

ELECTRICAL COMPONENT BOX

ELECTRICAL COMPONENT BOX

ITEM NUMBER	PART NUMBER	1 2 3 4 DESCRIPTION	UNITS PER VEHICLE
1	1015372	ELECTRICAL COMPONENT BOX COVER	1
2	1013589	RETAINING RING	1
3	1015373	CAM	1
4	1014145	BRONZE BUSHING	2
5	1014065	FLATWASHER (DELRIN)	1
6	1015345	BELL CRANK SHAFT ASSEMBLY	1
7	1010954	1/4 BALL STUD	1
8	8717	1/4-28 NYLON LOCK NUT	1
9	8057	#4-40 UNC HEX NUT	4
10	8058	#4 LOCKWASHER	2
11	1014807	LIMIT SWITCH	1
12	1014808	LIMIT SWITCH	1
13	1012431	#4 FLATWASHER	2
14	1015767	WIRE ASSEMBLY	1
15	1015766	WIRE ASSEMBLY	1
16	1015878	#4-40 UNC X 1.62 SCREW	2
17	1242	5/16-18 UNC HEX NUT	2
18	7893	#10-32 UNF HEX NUT	2
19	1013609	12 VOLT SOLENOID	1
20	1015752	#12-16 X .5 HILO SCREW	4
21	1015371	ELECTRICAL COMPONENT BOX	1
22	1012295	FUSE 10 AMP	1
23	1015737	WIRE ASSEMBLY	1
24	1015741	FUSE BLOCK	1
25	8233	1/4-20 NYLON LOCK NUT	2
26	1015777	VOLTAGE REGULATOR ASSEMBLY	1
27	1015343	GROUND STRAP	1
28	1015405	5/16-18 X 2.00 ROUND HEAD SQUARE NECK SCREW	1
29	1015919	1/4-20 JAM NUT	1
30	1703	1/4-20 X 1.50 HEX SCREW (NOT SHOWN)	1
31	304	1/4-20 UNC X 1 HEX SCREW	1
32	8168	WIRE TIE WRAP (NOT SHOWN)	2
33	1703	1/4-20 X 1.50 HEX SCREW	1

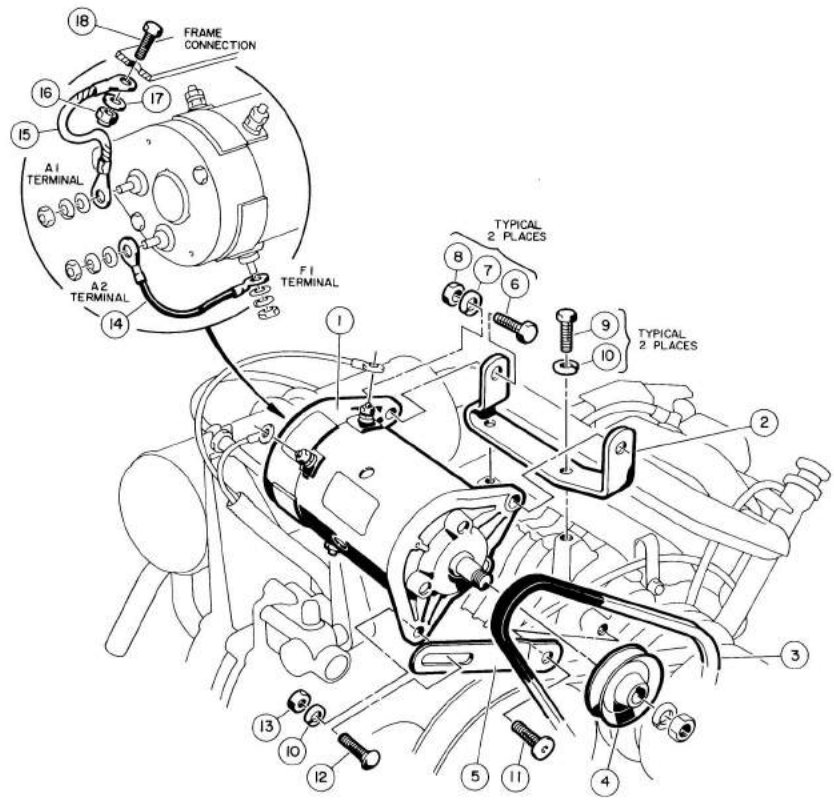

STARTER-GENERATOR MOUNTING

ITEM NUMBER	PART NUMBER	1 2 3 4 DESCRIPTION	UNITS PER VEHICLE
1	1012316	STARTER-GENERATOR	1
2	1015240-01	MOUNTING BRACKET	1
3	1015241	BELT	1
4	1014289	PULLEY	1
5	1012335	ADJUSTING BRACKET	1
6	705	HEX HEAD SCREW, 3/8-16 X 1-1/4	2
7	357	LOCKWASHER, 3/8" DIAMETER	2
8	706	HEX NUT, 3/8-16	2
9	1015331	HEX HEAD SCREW, M8-1.25 X 25MM	2
10	7174	LOCKWASHER, 5/16" DIAMETER	2
11	1016074	TORX HEAD SCREW, M8-1.25 X 18MM	1
12	1015932	ROUND HEAD SQUARE NECK BOLT, 5/16-18 X 1	1
13	1242	HEX NUT, 5/16-18	1
14	1012384	#6 BLACK WIRE ASSEMBLY	1
15	1015920	GROUND WIRE	1
16	7473	NYLON LOCK NUT, 5/16-18	1
17	1241	FLATWASHER, 5/16" DIAMETER	1
18	7173	HEX HEAD CAP SCREW, 5/16-18 X 3/4	1

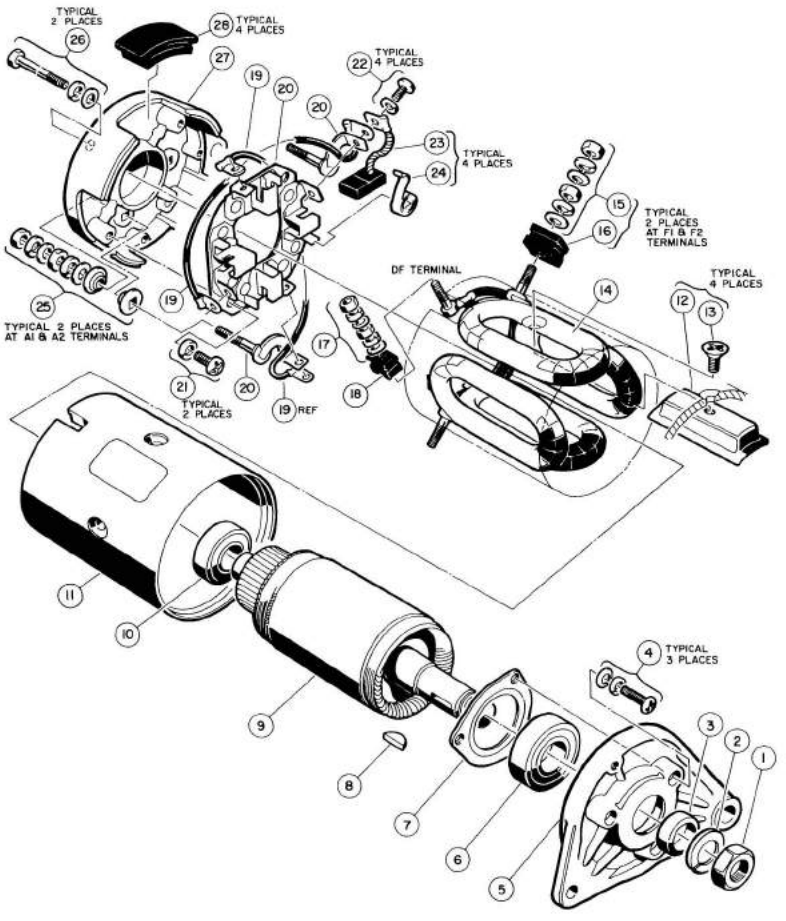

STARTER-GENERATOR ASSEMBLY

ITEM NUMBER	PART NUMBER	1 2 3 4 DESCRIPTION	UNITS PER VEHICLE
1	NO #	HEX NUT, M14 X 1.5	1
2	NO #	LOCKWASHER, M14	1
3	1013000	SPACER	1
4	NO #	CROSS-RECESSED SCREW, M5 X 18 WITH LOCKWASHERS AND FLATWASHERS	3
5	1012999	OUTPUT SHAFT END BELL	1
6	1013001	DOUBLE SEALED BALL BEARING	1
7	1013002	BEARING RETAINER	1
8	1013003	KEY	1
9	1013004	ARMATURE ASSEMBLY INCLUDES ITEMS 3, 6, 7, 10 AND ARMATURE	1
10	1013005	DOUBLE SEALED BALL BEARING	1
11	1013006	FRAME ASSEMBLY INCLUDES ITEMS 12 THRU 18 AND FRAME	1
12	NO #	POLE PIECE	4
13	1013009	POLE PIECE SCREW	4
14	1013010	FIELD COIL ASSEMBLY	1
15	1013007	TERMINAL HARDWARE KIT INCLUDES NUTS, LOCKWASHERS AND FLATWASHERS	2
16	NO #	INSULATOR	2
17	1013017	TERMINAL HARDWARE KIT INCLUDES NUTS, LOCKWASHERS AND FLATWASHERS	1
18	NO #	INSULATOR	
19	1013013	CROSSOVER LEAD	2
20	1013011	BRUSH HOLDER	1
21	NO #	SCREW, M5 X 16 WITH LOCKWASHER	2
22	1013014	SCREW, M4 X 10 WITH LOCKWASHER	4
23	1014699	BRUSH PACKAGE INCLUDES 4 BRUSHES	1
24	1013016	BRUSH SPRING	4
25	1012990	TERMINAL HARDWARE KIT INCLUDES NUTS, LOCKWASHERS, FLATWASHERS AND INSULATORS	2
26	1012992	CLAMP BOLT, 6 X 180	2
27	1012993	COMMUTATOR END BELL	1
28	1012991	BRUSH INSPECTION PORT COVER	4

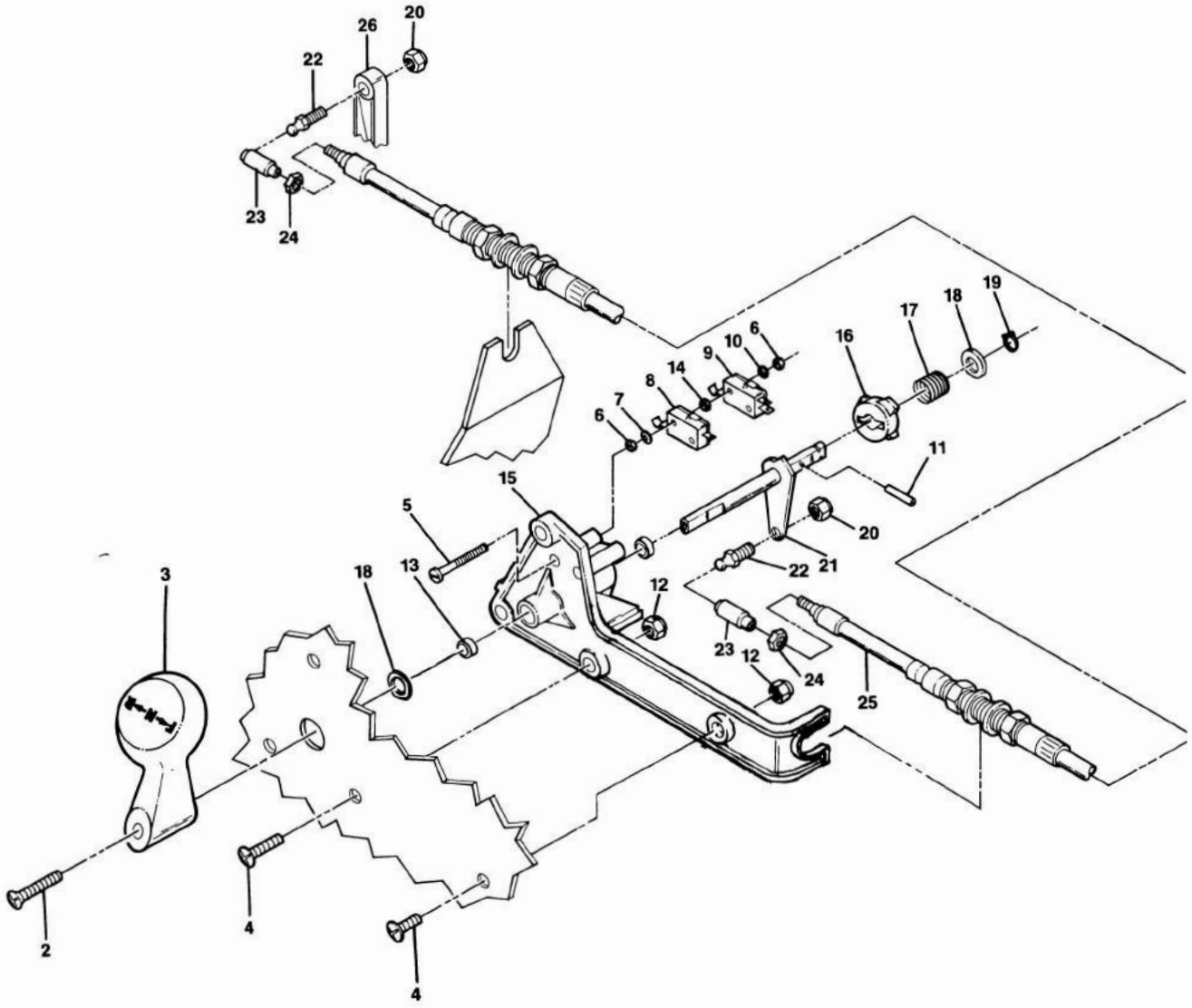

F&R SHIFTER ASSEMBLY

F&R SHIFTER ASSEMBLY

ITEM NUMBER	PART NUMBER	1 2 3 4 DESCRIPTION	UNITS PER VEHICLE
1	1016947	F&R SHIFTER ASSEMBLY INCLUDES ITEMS 5 THRU 22, 27 AND 28	1
2	1013198	#8-32 PHILLIPS MACHINE SCREW	1
3	1012987	F&R HANDLE	1
4	8248	SCREW, 1/4-20 X 3/4" PHILLIPS HEAD	1
5	1012594	SCREW, #4-40 X 1.00" MACHINE	2
6	8057	NUT, #4-40 UNC HEX	6
7	1012431	FLATWASHER, #4	2
8	1014808	LIMIT SWITCH	1
9	1014807	LIMIT SWITCH	1
10	8058	LOCKWASHER, #4	2
11	1013591	1/8" ROLL PIN	1
12	8233	LOCKNUT, 1/4-20 NYLON	4
13	1014145	BUSHING	2
14	1014727	#4 FLATWASHER (NYLON)	2
15	1016342	F&R SHIFTER BASE	1
16	1014089	NEUTRAL LOCK-OUT CAM KIT INCLUDES ITEM 18	1
17	1013590	SPRING — F&R CAM	1
18	1014065	FLATWASHER-DELRIN	1
19	1013589	RETAINING RING	1
20	8717	LOCKNUT, 1/4-28 NYLON	2
21	1013587	F&R BELL CRANK WELDMENT	1
22	1010954	BALL STUD, 1/4-28 UNF X .25	2
23	1012333	BALL JOINT	2
24	7893	NUT, #10-32 UNF HEX	2
25	1013085	TRANSMISSION SHIFT CABLE INCLUDES ITEMS 23 AND 24	1
26	1016341	TRANSMISSION SHIFT LEVER	1

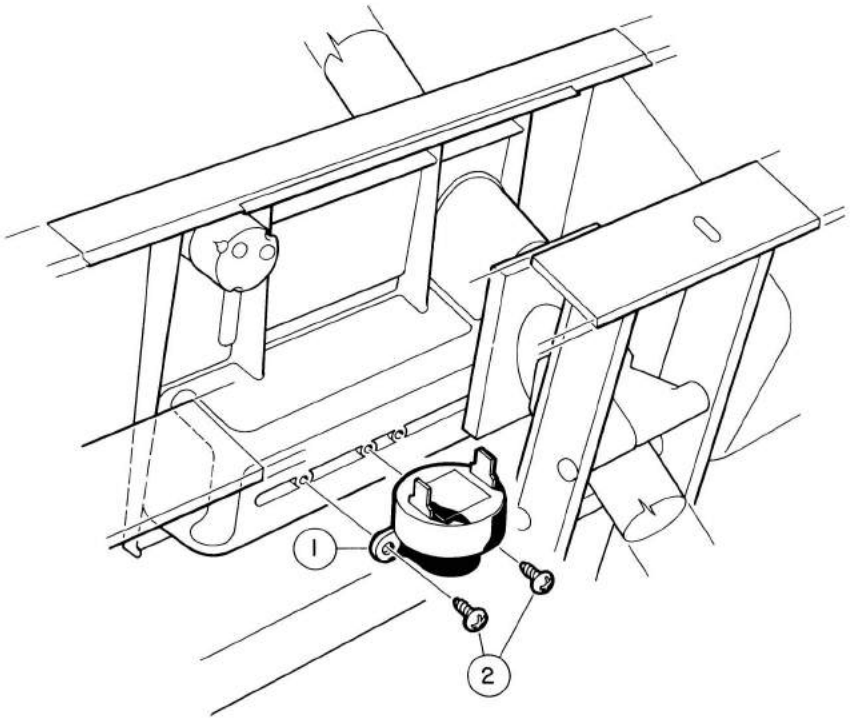

REVERSE BUZZER

ITEM NUMBER	PART NUMBER	1 2 3 4 DESCRIPTION	UNITS PER VEHICLE
1	1016851	REVERSE BUZZER	1
2	1016849	#4-24 X .330 SCREW PAN HEAD HI-LO	2
3	1016857	WIRE ASSEMBLY (BLACK) (NOT SHOWN)	1

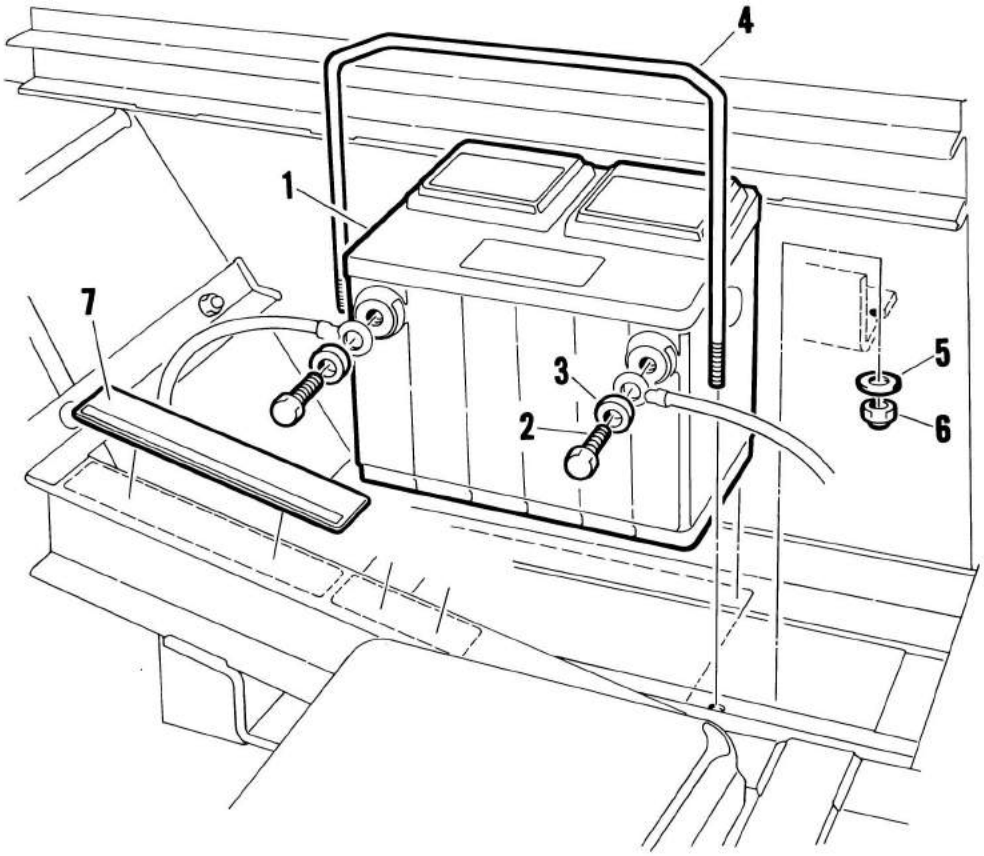

BATTERY

ITEM NUMBER	PART NUMBER	1 2 3 4 DESCRIPTION	UNITS PER VEHICLE
1	1012328	12 VOLT BATTERY	1
2	1014375	HEX HEAD BOLT, SS, 3/8-16 X 1/2	2
3	1014374	SPACER	2
4	1013882	BATTERY HOLD DOWN	1
5	1011931	WIDE FLATWASHER, 1/4" DIAMETER	2
6	8233	NYLON LOCKNUT, 1/4-20	2
7	1015474	FRAME GROUND DECAL	1

Section 6

ENGINE

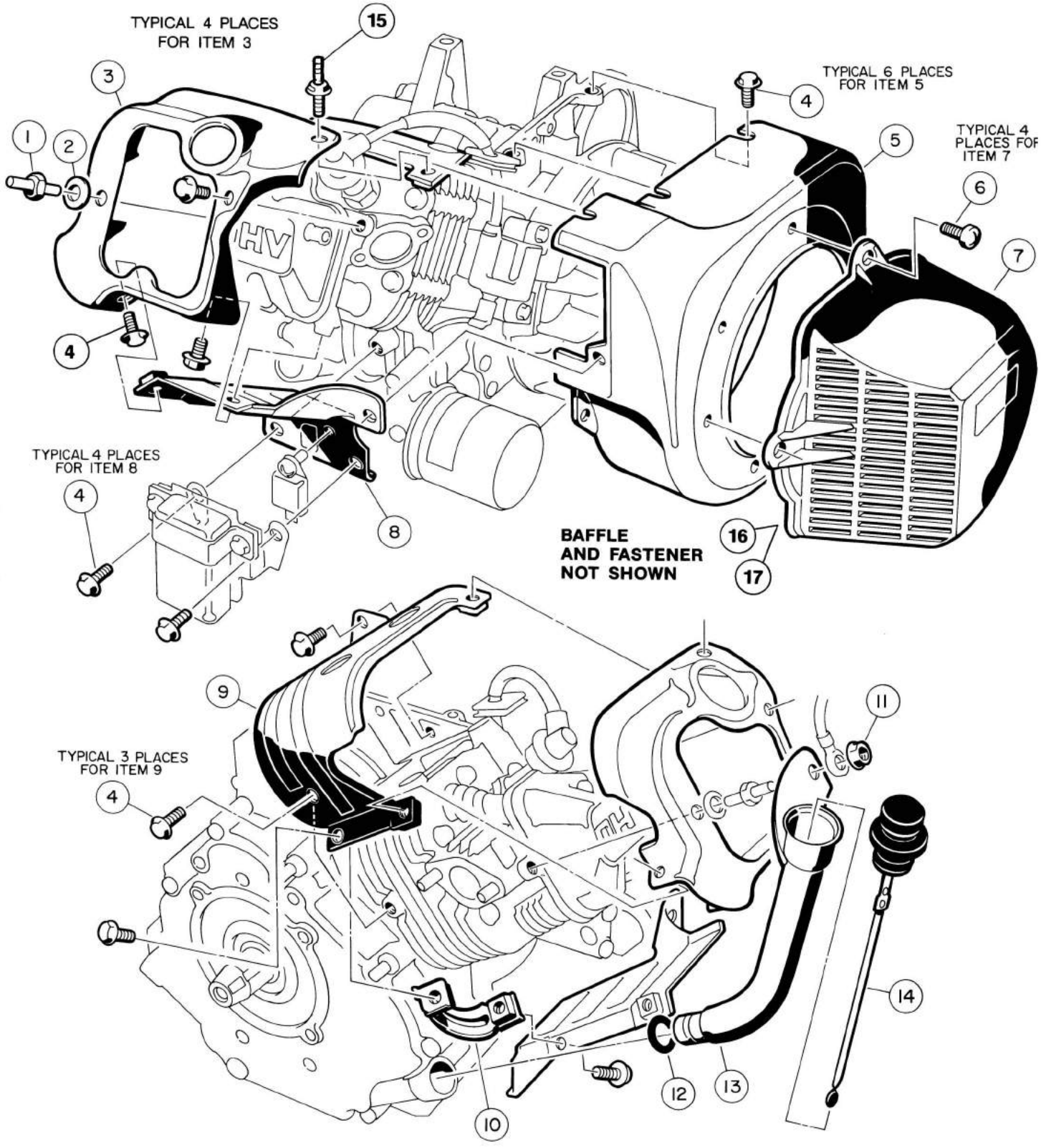
TYPICAL 4 PLACES FOR ITEM 3
15
3
1
2
4
TYPICAL 6 PLACES FOR ITEM 5
4
5
TYPICAL 4 PLACES FOR ITEM 7
6
7
4
TYPICAL 4 PLACES FOR ITEM 8
4
8
BAFFLE AND FASTENER NOT SHOWN
16
17
9
TYPICAL 3 PLACES FOR ITEM 9
4
11
14
12
13
10

ENGINE

ENGINE

ITEM NUMBER	PART NUMBER	1 2 3 4 DESCRIPTION	UNITS PER VEHICLE
	1015731	ENGINE — COMPLETE	
1	1016507	BOLT, 2-ENDED, M6 X 1	1
2	1016512	PLAIN WASHER, 6MM DIAMETER	1
3	1016524	ENGINE SHROUD	1
4	1016456	FLANGED BOLT, M6 X 1 X 12MM LONG	17
5	1016534	FAN HOUSING	1
6	1015969	PAN HEAD SCREW, M6 X 1 X 14MM LONG	4
7	1015649	FAN SHROUD	1
8	1016526	ENGINE SHROUD	1
9	1016525	ENGINE SHROUD	1
10	1016443	BRACKET	1
11	1016547	NUT, M6 X 1	1
12	1016539	O-RING	1
13	1016536	FILLER	1
14	1016531	GAUGE	1
15	1017221	BOLT, 2-ENDED	1
16	1017129	BAFFLE, FAN SHROUD (NOT SHOWN)	1
17	1010434	BARREL FASTENER (BLACK) (NOT SHOWN)	3

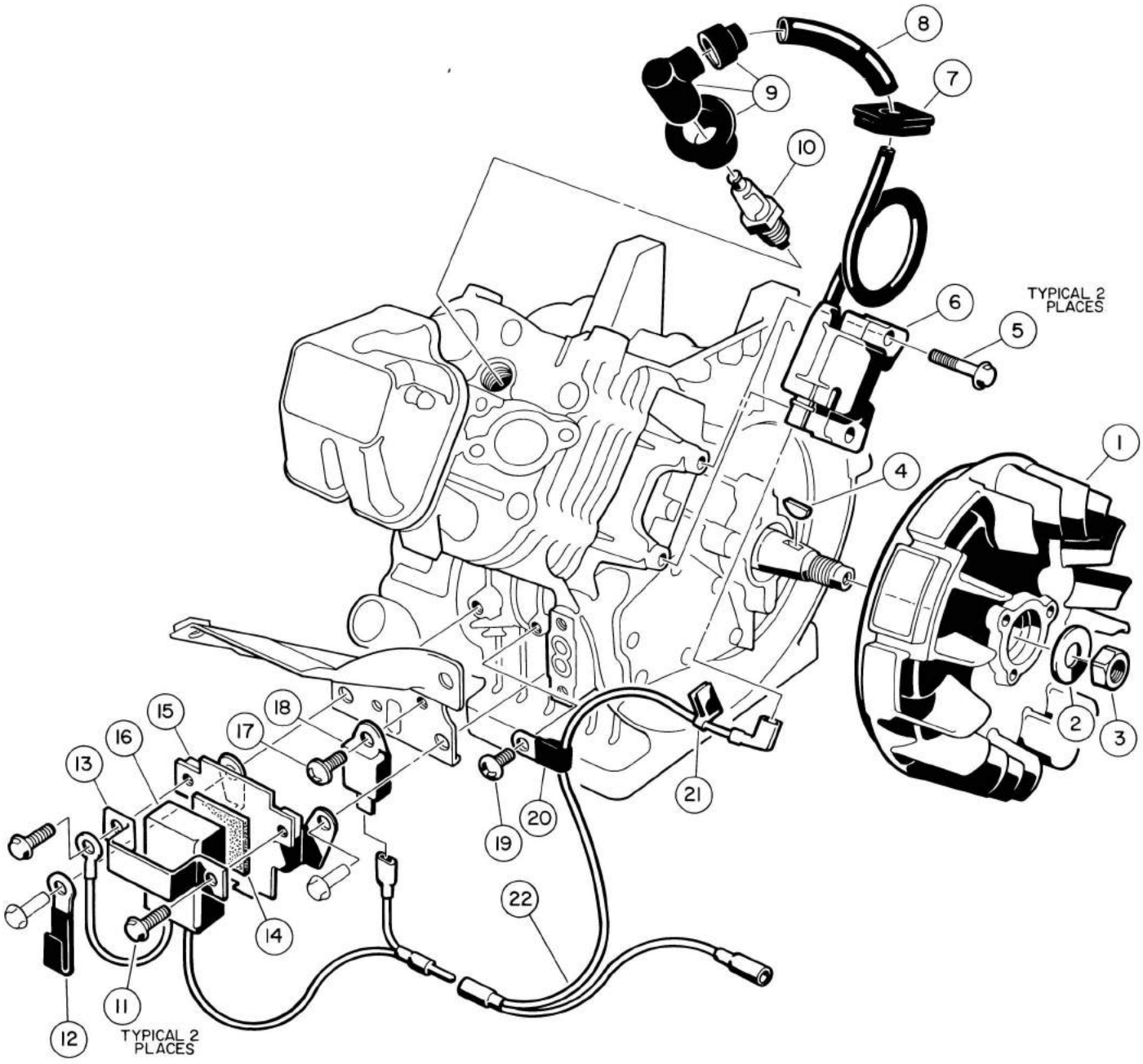
8
7
9
10
TYPICAL 2 PLACES
6
5
1
4
2
3
15
16
18
17
13
21
20
19
22
14
11
12
TYPICAL 2 PLACES

ENGINE

ITEM NUMBER	PART NUMBER	1 2 3 4 DESCRIPTION	UNITS PER VEHICLE
1	1016495	FLYWHEEL	1
2	1016548	FLATWASHER, 16MM DIAMETER	1
3	1016505	HEX NUT, M16 X 1.5	1
4	1016562	KEY	1
5	1016455	FLANGED BOLT, M5 X 0.8 X 25MM LONG	2
6	1016492	IGNITION COIL	1
7	1016578	GROMMET	1
8	1016588	TUBE	1
9	1016493	PLUG CAP ASSEMBLY	1
10	1016111	SPARK PLUG	1
11	1016456	FLANGED BOLT, M6 X 1.0 X 12MM LONG	2
12	1012978	CLAMP TUBE	1
13	1016579	BAND	1
14	1016586	DAMPER	1
15	1016445	BRACKET	1
16	1016511	RPM LIMITER	1
17	1016497	CROSS PAN HEAD SCREW, M5 X 0.8 X 8MM LONG	1
18	1016491	IGNITER	1
19	1016544	CROSS PAN HEAD SELF TAP SCREW M5 X 12MM LONG	1
20	1016561	CLAMP	1
21	1016587	CLAMP	1
22	1016503	LEAD WIRE	1

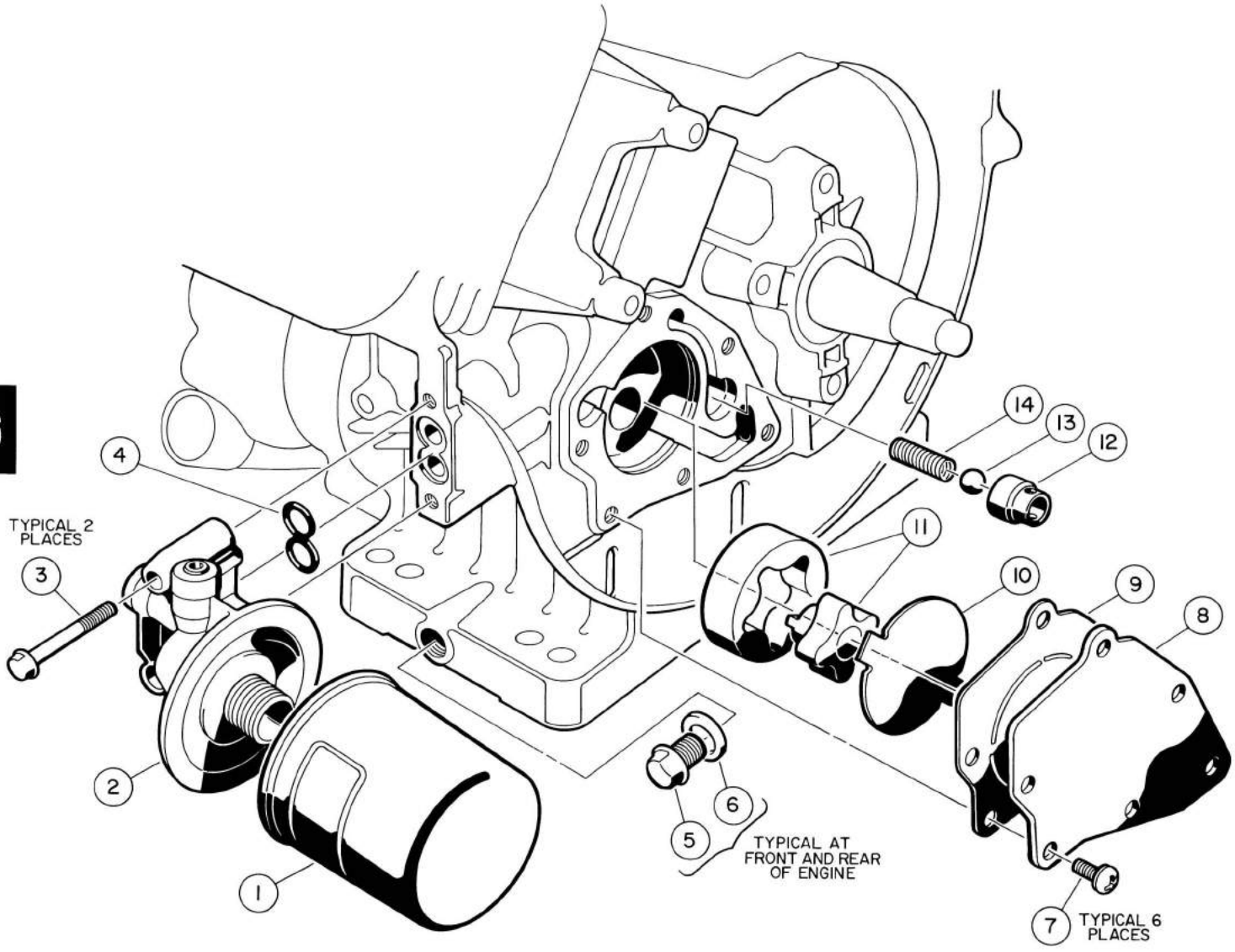
TYPICAL 2 PLACES
TYPICAL AT FRONT AND REAR OF ENGINE
TYPICAL 6 PLACES
1
2
3
4
5
6
7
8
9
10
11
12
13
14

ITEM NUMBER	PART NUMBER	1 2 3 4 DESCRIPTION	UNITS PER VEHICLE
1	1016467	OIL FILTER	1
2	1016502	OIL FILTER BRACKET	1
3	1016457	FLANGED HEX HEAD BOLT, M6 X 1.0 X 40MM LONG	2
4	1016570	O-RING	1
5	1016576	DRAW PLUG	2
6	1016432	GASKET	2
7	1016498	CROSS PAN HEAD SCREW, M6 X 1.0 X 12MM LONG	6
8	1016484	PUMP COVER	1
9	1016435	OIL PUMP GASKET	1
10	1016473	OIL PUMP PLATE	1
11	1016482	PUMP ASSEMBLY — OIL	1
12	1016429	VALVE SEAT	1
13	1016537	STEEL BALL	1
14	1016581	SPRING	1

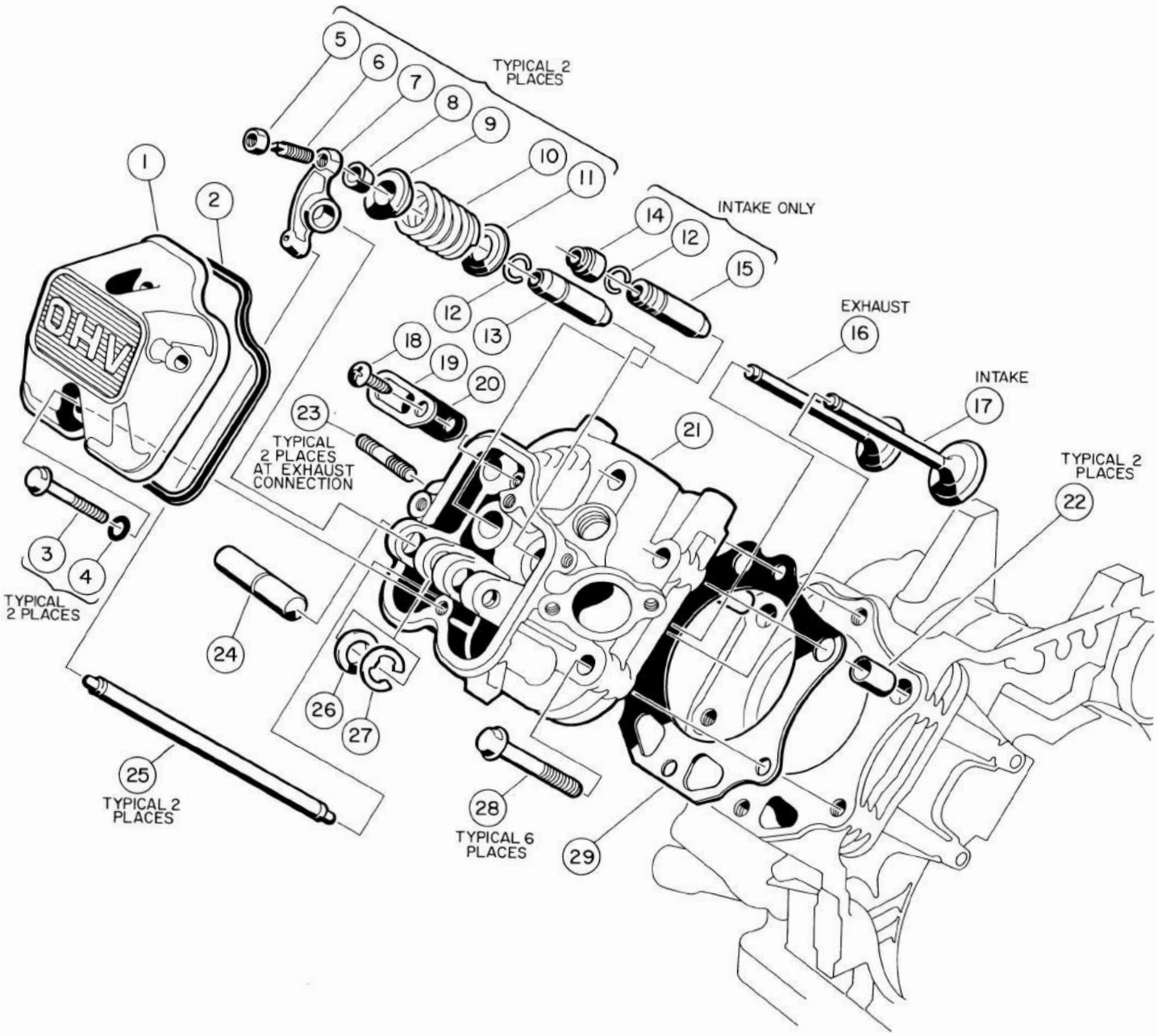
OHV
TYPICAL 2 PLACES
INTAKE ONLY
EXHAUST
INTAKE
TYPICAL 2 PLACES AT EXHAUST CONNECTION
TYPICAL 2 PLACES
TYPICAL 2 PLACES
TYPICAL 2 PLACES
TYPICAL 6 PLACES
1
2
3
4
5
6
7
8
9
10
11
12
13
14
15
16
17
18
19
20
21
22
23
24
25
26
27
28
29

ITEM NUMBER	PART NUMBER	1 2 3 4 DESCRIPTION	UNITS PER VEHICLE
1	1016442	ROCKER CASE	1
2	1016436	ROCKER CASE GASKET	1
3	1016583	FLANGED BOLT, M6 X 1.0 X 35MM LONG	2
4	1016569	O-RING	2
5	1016542	SCREW	2
6	1016545	HEX NUT	2
7	1016451	ROCKER ARM	2
8	1016450	COLLET	2
9	1016449	VALVE SPRING RETAINER	2
10	1016523	ENGINE VALVE SPRING	2
11	1016479	SPRING SEAT	2
12	1016560	SNAP RING	2
13	1016518	VALVE GUIDE (EXHAUST)	1
14	1016566	OIL SEAL	1
15	1016519	VALVE GUIDE (INTAKE)	1
16	1016448	EXHAUST VALVE	1
17	1016447	INTAKE VALVE	1
18	1016544	SCREW	1
19	1016474	PLATE	1
20	1016483	VALVE	1
21	1016431	CYLINDER HEAD INCLUDES ITEMS 12, 13 AND 15	1
22	1016563	PIN	2
23	1016489	STUD BOLT	2
24	1016452	ROCKER SHAFT	1
25	1016471	PUSH ROD	2
26	1016549	WASHER	1
27	1016517	TYPE-E CIRCLIP	1
28	1016458	FLANGED BOLT, M8 X 1.25 X 45MM LONG	6
29	1016430	HEAD GASKET	1

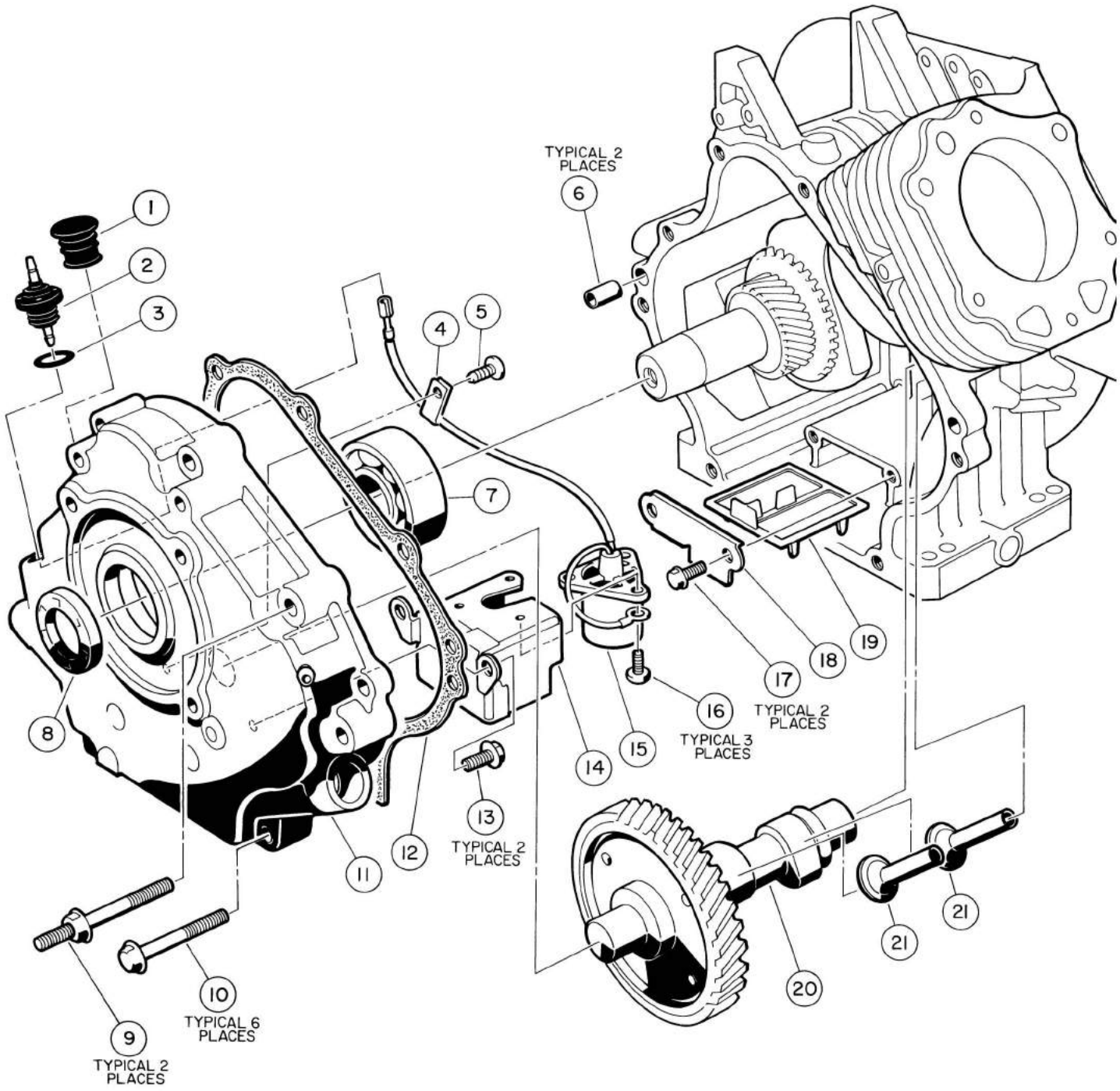
TYPICAL 2 PLACES
6
1
2
3
4
5
7
8
9
TYPICAL 2 PLACES
10
TYPICAL 6 PLACES
11
12
13
TYPICAL 2 PLACES
14
15
16
TYPICAL 3 PLACES
17
TYPICAL 2 PLACES
18
19
20
21
21

ENGINE

ENGINE

ITEM NUMBER	PART NUMBER	1 2 3 4 DESCRIPTION	UNITS PER VEHICLE
1	1016596	PLUG	1
2	1016535	CORD CONNECTOR	1
3	1016538	O-RING	1
4	1016506	CLAMP	1
5	1016544	CROSS PAN HEAD SELF TAPPING SCREW, 5MM DIAMETER X 12MM LONG	1
6	1016564	PIN	2
7	1016565	BALL BEARING	1
8	1016567	OIL SEAL	1
9	1016584	FLANGED 2-ENDED BOLT, M8 X 1.25	2
10	1016458	FLANGED BOLT, M8 X 1.25	6
11	1016520	CRANKCASE COVER	1
12	1016446	CRANKCASE COVER GASKET	1
13	1016456	FLANGED BOLT, M5 X 1.0 X 12MM LONG	2
14	1016510	SWITCH BRACKET	1
15	1016494	SENSOR	1
16	1016496	CROSS PAN HEAD SCREW, M4 X 0.7 X 8MM LONG	3
17	1016454	FLANGED BOLT, M5 X 0.8 X 8MM LONG	2
18	1016472	OIL FILTER PLATE	1
19	1016521	OIL FILTER	1
20	1016528	CAMSHAFT	1
21	1016453	TAPPET	2

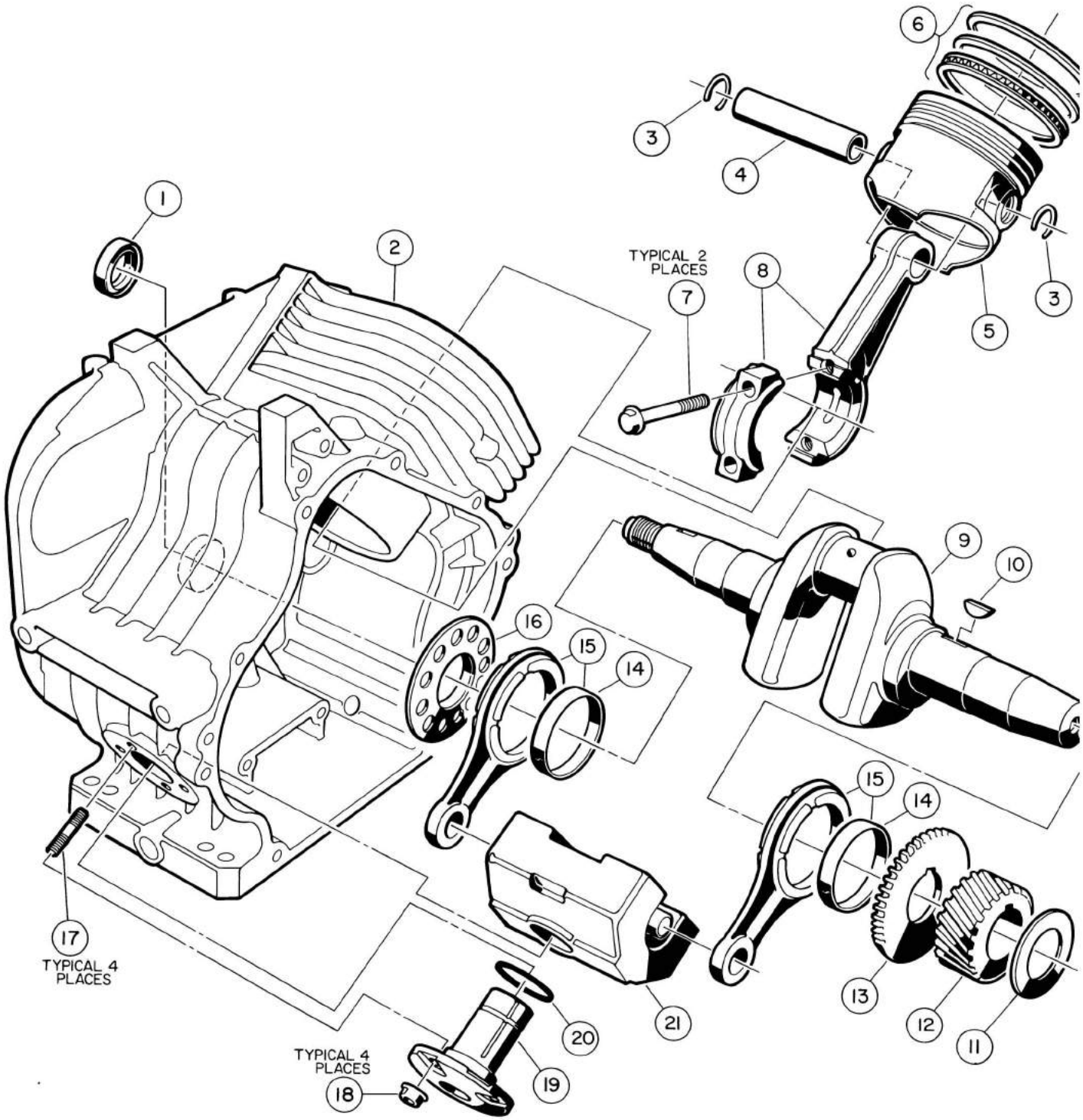
1
2
3
4
5
6
7
8
9
10
11
12
13
14
15
16
17
18
19
20
21
TYPICAL 2 PLACES
TYPICAL 4 PLACES
TYPICAL 4 PLACES

ENGINE

ITEM NUMBER	PART NUMBER	1 2 3 4 DESCRIPTION	UNITS PER VEHICLE
1	1016568	OIL SEAL	1
2	1016529	CRANKCASE	1
3	1016558	SNAP RING	2
4	1016460	PISTON PIN	1
5	1016459-01	PISTON — STANDARD	1
5	1016459-02	PISTON — .25MM OVERSIZE	1
5	1016459-03	PISTON — .50MM OVERSIZE	1
5	1016459-04	PISTON — .75MM OVERSIZE	1
6	1016461-01	PISTON RING — STANDARD	1
6	1016461-02	PISTON RING — .25MM OVERSIZE	1
6	1016461-03	PISTON RING — .50MM OVERSIZE	1
6	1016461-04	PISTON RING — .75MM OVERSIZE	1
7	1016509	BOLT	2
8	1016475-01	CONNECTING ROD ASSEMBLY — STANDARD INCLUDES 2 EACH ITEM 7	1
8	1016475-02	CONNECTING ROD ASSEMBLY — .50MM UNDERSIZE INCLUDES 2 EACH ITEM 7	1
9	1016468	CRANKSHAFT INCLUDES 1 EACH ITEMS 10, 12, 13 AND 15	1
10	1016562	KEY	1
11	1016550	SHIM	1
12	1016533	HELICAL GEAR	1
13	1016532	SPUR GEAR	1
14	1016580	PLAIN BEARING	2
15	1016516	CONNECTING ROD ASSEMBLY INCLUDES ITEM 14	2
16	1016559	SPACER	1
17	1016541	STUD M6 X 1.0	4
18	1016547	FLANGED NUT M6 X 1.0	4
19	1016420	SHAFT	1
20	1016571	O-RING	1
21	1016469	WEIGHT	1

Section 7

FUEL, INTAKE AND GOVERNOR SYSTEM

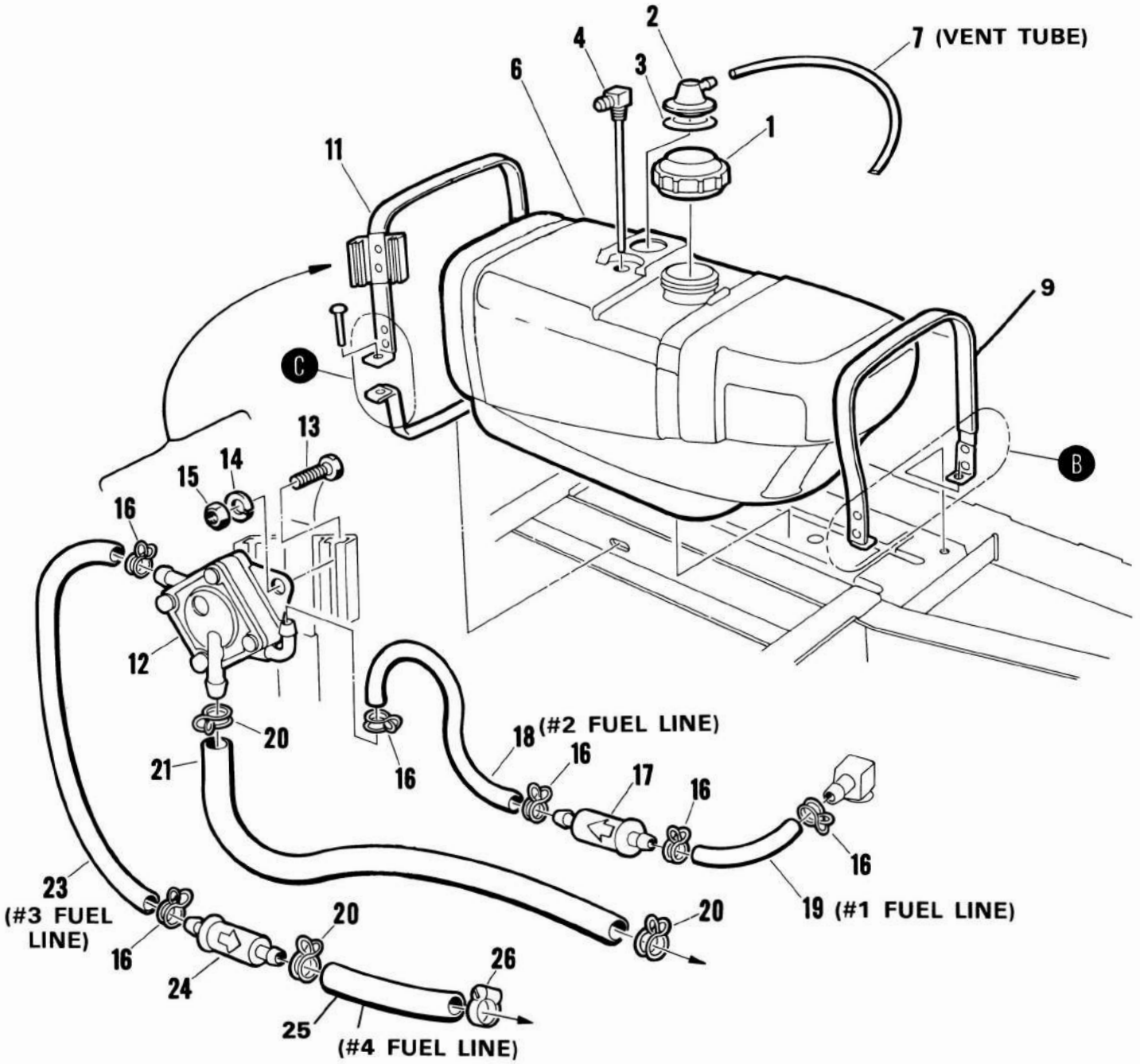

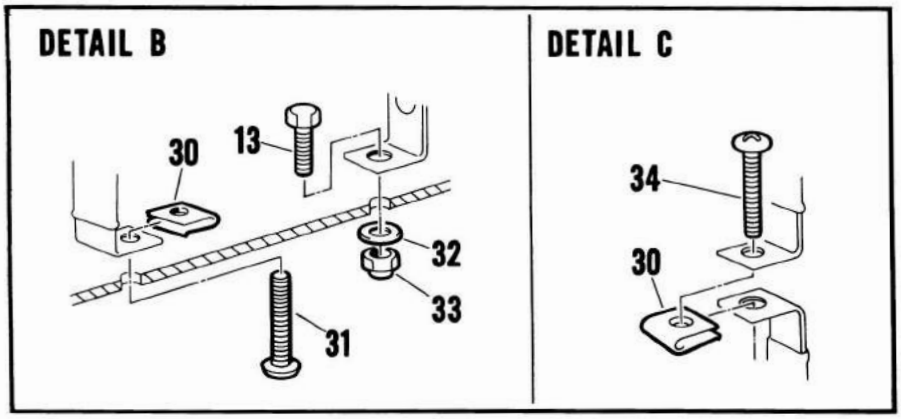

FUEL SYSTEM ASSEMBLY

FUEL SYSTEM ASSEMBLY

ITEM NUMBER	PART NUMBER	1 2 3 4 DESCRIPTION	UNITS PER VEHICLE
1	1015188	FUEL TANK CAP	1
2	1015143	FUEL TANK VENT	1
3	1015139	INSULATION GROMMET	1
4	1012619	FUEL PICK-UP TUBE	1
5	1015921	WIRE ASSEMBLY #16 BLACK	1
6	1016003	FUEL TANK ASSEMBLY	1
		INCLUDES ITEMS 1 THRU 3 AND ITEM 7	
7	NO #	VENT FUEL LINE, 17"	1
		SEE ITEM 37	
9	1014928	REAR FUEL STRAP ASSEMBLY	1
11	1014927	FRONT FUEL STRAP ASSEMBLY	1
12	1014523	FUEL PUMP	1
12A	1014524	FUEL PUMP REBUILD KIT	A/R
13	7847	HEX HEAD BOLT, 1/4-20 X 3/4	3
14	451	LOCKWASHER, HEL SP, 1/4" DIAMETER	2
15	1028	HEX NUT,1/4-20	2
16	1013134	HOSE CLAMP (RED)	6
17	1013684	PRIMARY FUEL FILTER (WHITE)	1
18	NO #	FUEL LINE, 6"	1
		SEE ITEM 35	
19	NO #	FUEL LINE, 2"	1
		SEE ITEM 35	
20	1012649	HOSE CLAMP	3
21	NO #	IMPULSE LINE, 19-1/4"	1
		SEE ITEM 36	
22	8639	TIE WRAP (IF USED)	1
23	NO #	FUEL LINE, 22"	1
		SEE ITEM 35	
24	1014522	SECONDARY FUEL FILTER (BLUE)	1
25	NO #	FUEL LINE,2-1/4"	1
		SEE ITEM 36	
26	1013687	HOSE CLAMP, 3/8" DIAMETER	1
30	1014116	SPEED NUT,U-TYPE, 1/4-20	2
31	1013176	PH TR HEAD SCREW, 1/4-20 X 2-1/2	1
32	332	FLATWASHER, 1/4" DIAMETER	1
33	8233	NYLON LOCKNUT, 1/4-20	1
34	1011988	PH TR HEAD SCREW, 1/4-20 X 2	1
35	1012293	FUEL LINE BULK	A/R
36	1013692	FUEL LINE BULK	A/R
37	1015137	FUEL LINE BULK	A/R

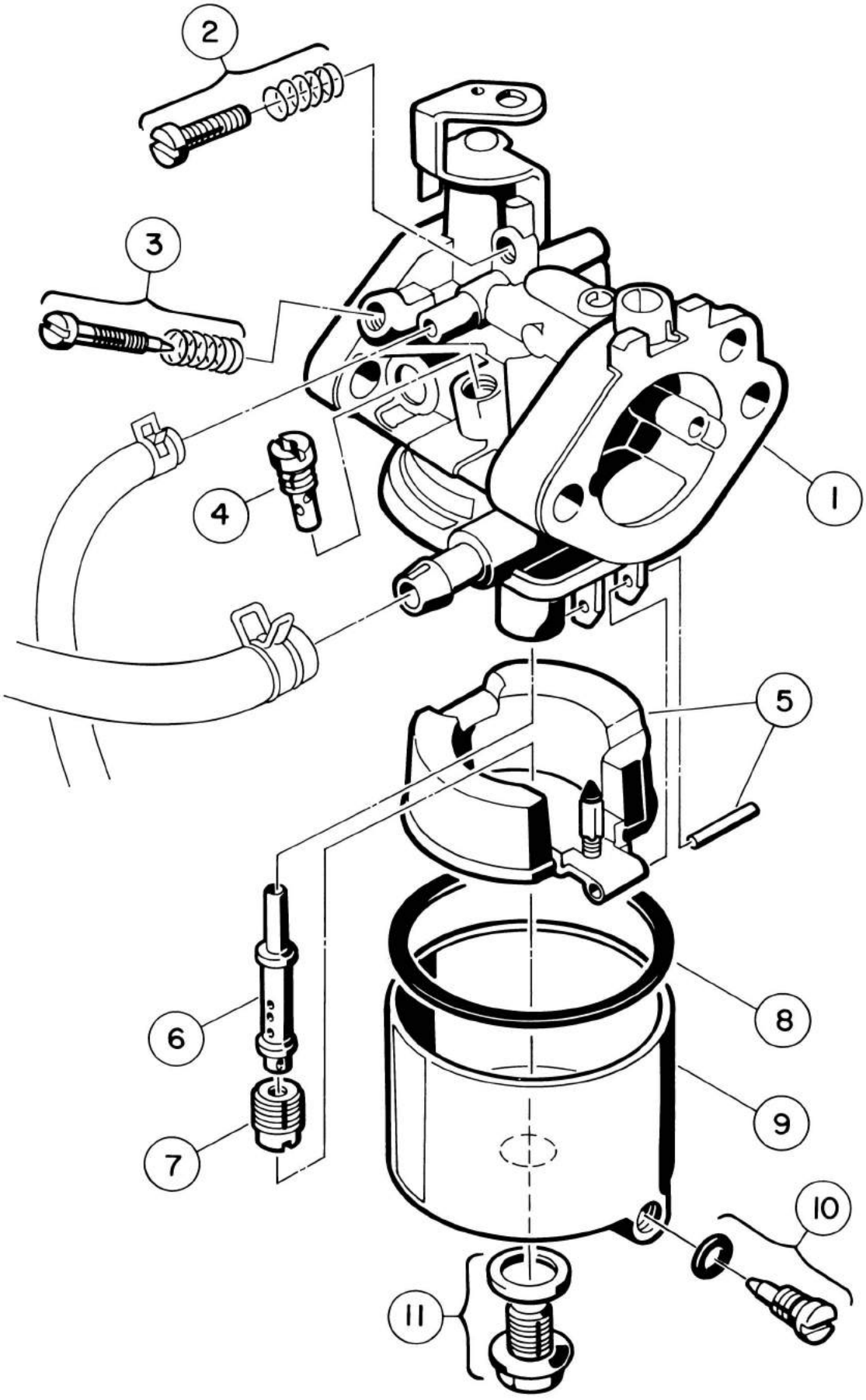

CARBURETOR ASSEMBLY

CARBURETOR ASSEMBLY

ITEM NUMBER	PART NUMBER	1 2 3 4 DESCRIPTION	UNITS PER VEHICLE
1	1016478	CARBURETOR ASSEMBLY	1
		INCLUDES ITEMS 2 THRU 11 AND CARBURETOR BODY WITH THROTTLE VALVE	
2	1016501	SCREW ASSEMBLY	1
3	1016500	SCREW ASSEMBLY	1
4	1016574	PILOT JET, #45	1
5	1016486	FLOAT ASSEMBLY	1
6	1016530	MAIN NOZZLE	1
7	1016425-70	MAIN JET	1
7	1016425-72	MAIN JET	1
7	1016425-75	MAIN JET	1
7	1016425-78	MAIN JET	1
7	1016425-80	MAIN JET	1
8	1016437	GASKET	1
9	1016487	FLOAT CHAMBER ASSEMBLY	1
		INCLUDES ITEM 10 AND FLOAT CHAMBER	
10	1016499	SCREW ASSEMBLY	1
11	1016585	BOLT	1

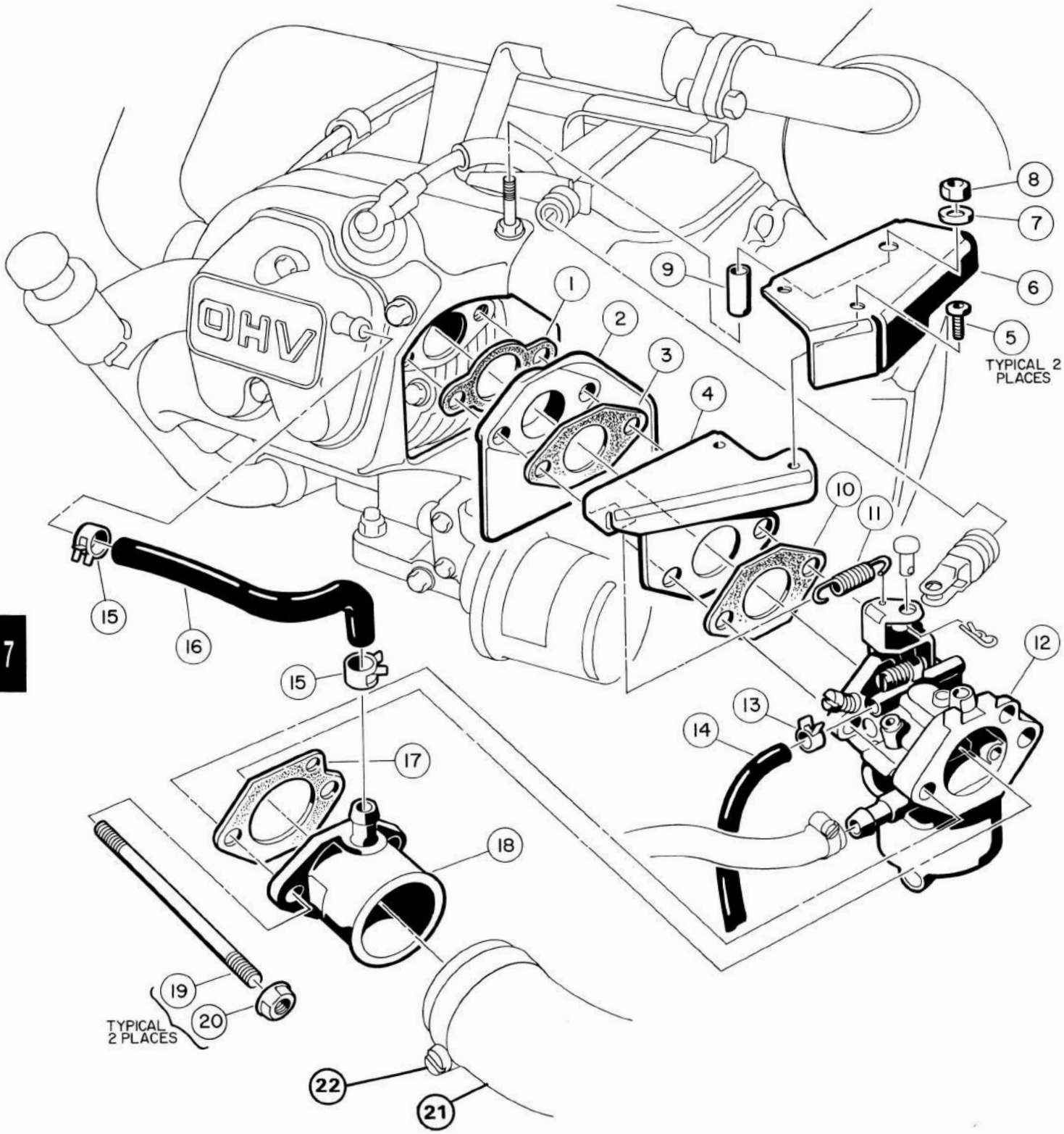

GOVERNOR GUARD AND INTAKE HOSE

GOVERNOR GUARD AND INTAKE HOSE

ITEM NUMBER	PART NUMBER	1 2 3 4 DESCRIPTION	UNITS PER VEHICLE
1	1016440	INSULATOR GASKET	1
2	1016481	INSULATOR	1
3	1016439	CARBURETOR GASKET	1
4	1016444	BRACKET	1
5	1016103	PAN HEAD, TORX HEAD, SELF-TAPPING SCREW, #6-32 X 1/4	2
6	1016102	GOVERNOR GUARD	1
7	451	LOCKWASHER, 1/4" DIAMETER	1
8	1011114	HEX NUT, M6	1
9	1016848	SPACER	1
10	1016441	GASKET	1
11	1016582	SPRING	1
12	1016478	CARBURETOR ASSEMBLY	1
13	1013746	HOSE CLAMP	1
14	1015877-01	AIR VENT TUBE	1
15	1013746	HOSE CLAMP	2
16	1016572	TUBE	1
17	1016438	AIR FILTER GASKET	1
18	1016480	INTAKE PIPE	1
19	1016490	STUD BOLT	2
20	1016547	FLANGED NUT, M6	2
21	1016228	HOSE — INTAKE	1
22	1015430	CLAMP — HOSE	2

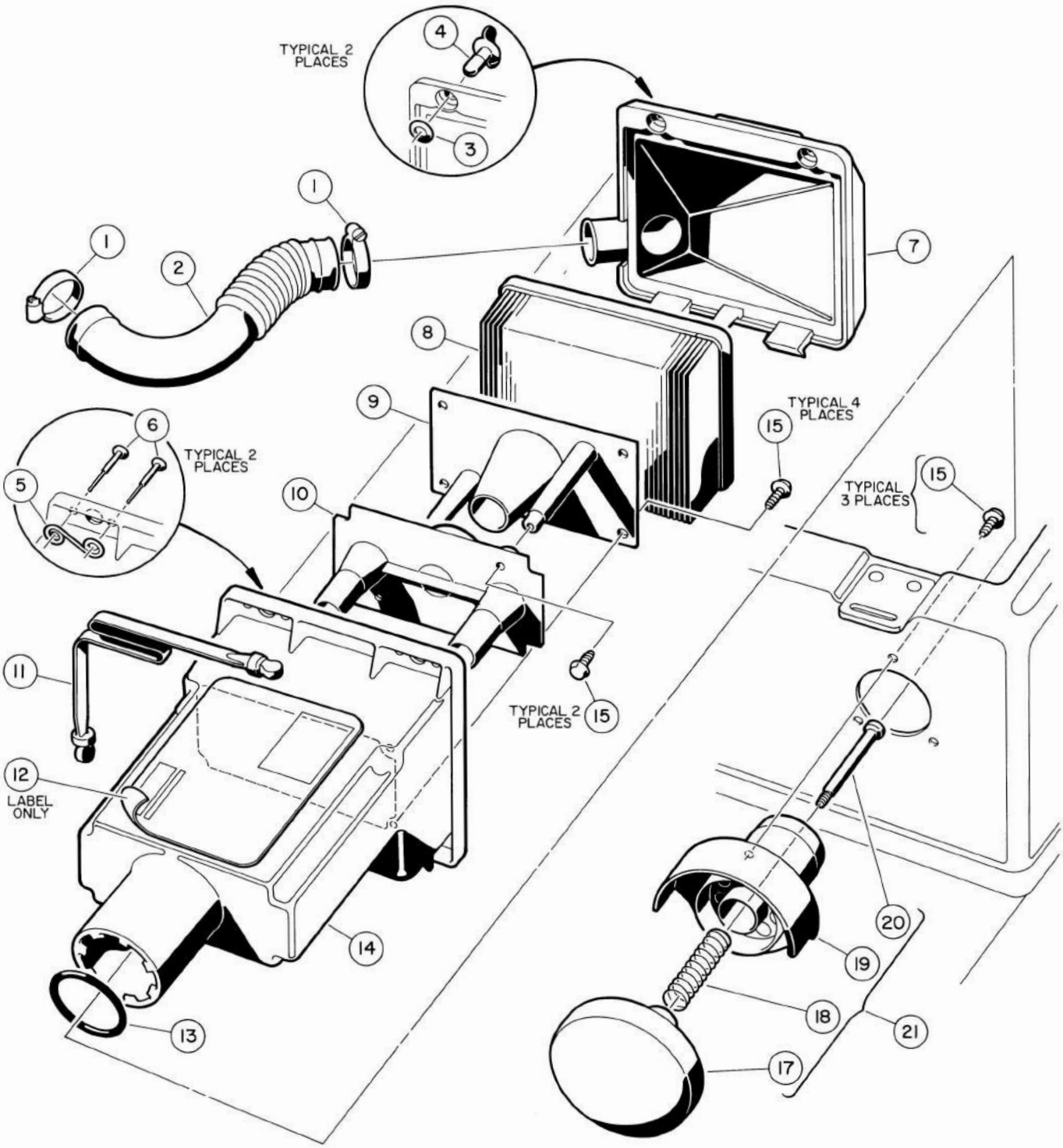

EXPANSION CHAMBER, CHOKE AND FILTER

EXPANSION CHAMBER, CHOKE AND FILTER

ITEM NUMBER	PART NUMBER	1 2 3 4 DESCRIPTION	UNITS PER VEHICLE
1	1015430	HOSE CLAMP	2
2	1016228	INTAKE HOSE	1
3	1015291	FASTENER GROMMET	2
4	1015290	WING HEAD STUD	2
5	1015292	FASTENER SPRING	2
6	1015727	POP RIVET	4
7	1015293	EXPANSION CHAMBER COVER	1
8	1015426	AIR FILTER ELEMENT	1
9	1015542	SECONDARY AIR BOX BAFFLE	1
10	1015541	PRIMARY AIR BOX BAFFLE	1
11	1015577	RETENSION STRAP	1
12	1016062	SERVICE DECAL	1
13	1015425	O-RING	1
14	1015540	EXPANSION CHAMBER	1
15	1015289	HI-LO SCREW, #10 X 5/8 LONG	9
17	1012629	CHOKE COVER	1
18	1012633	CHOKE SPRING	1
19	1015485	CHOKE BASE	1
20	1012634	SHOULDER SCREW	1
21	1015745	CHOKE ASSEMBLY	1
		INCLUDES ITEMS 17 THRU 20	

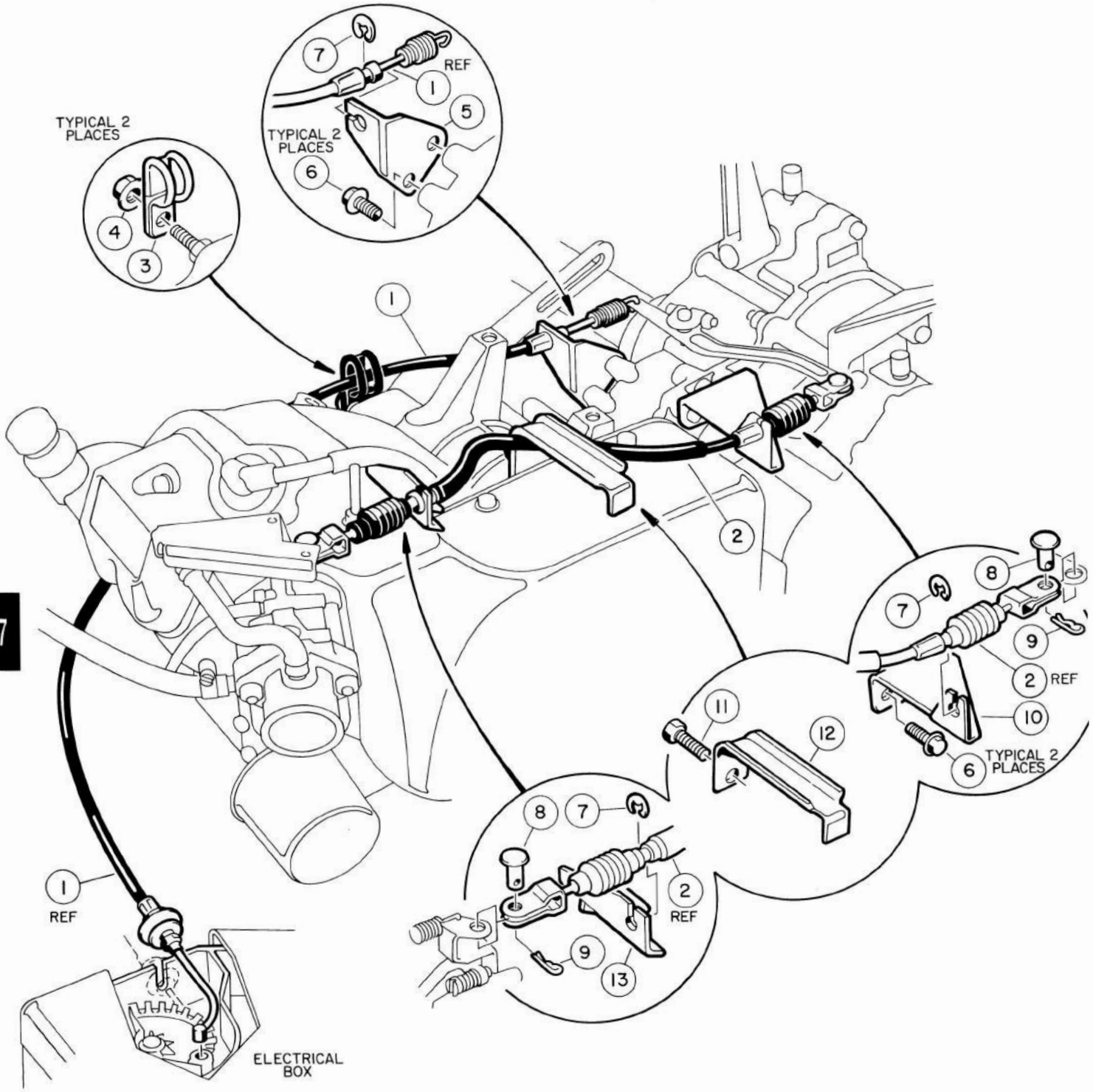

GOVERNOR AND ACCELERATOR CABLES

GOVERNOR AND ACCELERATOR CABLES

ITEM NUMBER	PART NUMBER	1 2 3 4 DESCRIPTION	UNITS PER VEHICLE
1	1015225	ACCELERATOR CABLE	1
2	1015226	GOVERNOR CABLE	1
3	1013700	CLAMP — HOSE RETAINING	2
4	1016546	NUT	2
5	1015410	ACCELERATOR SUPPORT BRACKET	1
6	1015746	SCREW, 1/4-20 X 5/8" LONG THREAD FORMING	4
7	1016202	"E"-CLIP	3
8	1015408	CLEVIS PIN	2
9	1014413	HAIR SPRING COTTER — 1/8" I.D. X 5/8" LONG	2
10	1015411	SUPPORT BRACKET	1
11	1016456	FLANGED BOLT	1
12	1016057	THROTTLE CABLE CLAMP	1
13	1015845	GOVERNOR CABLE BRACKET	1

Section 8

EXHAUST SYSTEM

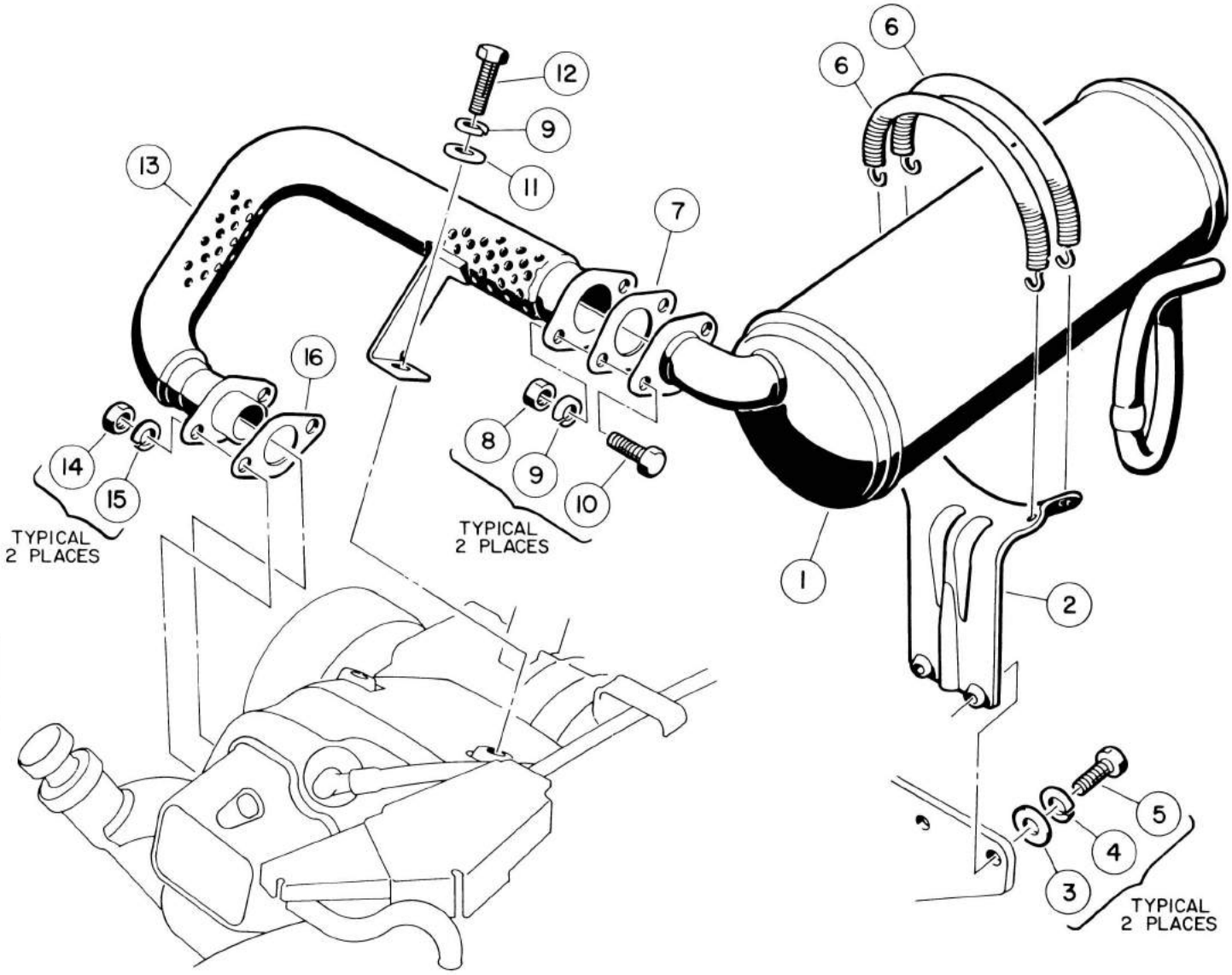

EXHAUST SYSTEM

EXHAUST SYSTEM

ITEM NUMBER	PART NUMBER	1 2 3 4 DESCRIPTION	UNITS PER VEHICLE
1	1016821	MUFFLER	1
2	1015814	MUFFLER BRACKET	1
3	332	FLATWASHER, 1/4" DIAMETER	2
4	451	LOCKWASHER, 1/4" DIAMETER	2
5	7847	HEX HEAD SCREW, 1/4-20 X 3/4	2
6	1015881	MUFFLER SPRING	2
7	1015450	GASKET	1
8	1242	HEX NUT, 5/16-18	2
9	7174	LOCKWASHER, 5/16" DIAMETER	2
10	1010934	HEX HEAD BOLT, 5/16-18 X 1	2
11	1011697	FLATWASHER, 5/16" DIAMETER	1
12	1012830	HEX HEAD SCREW, M8-1.25 X 22MM BOLT	1
13	1015247	EXHAUST HEADER	1
14	1012528	HEX NUT, 8MM	2
15	1013734	LOCKWASHER, 8MM	2
16	1015330	GASKET	1

Section 9

TORQUE CONVERTER

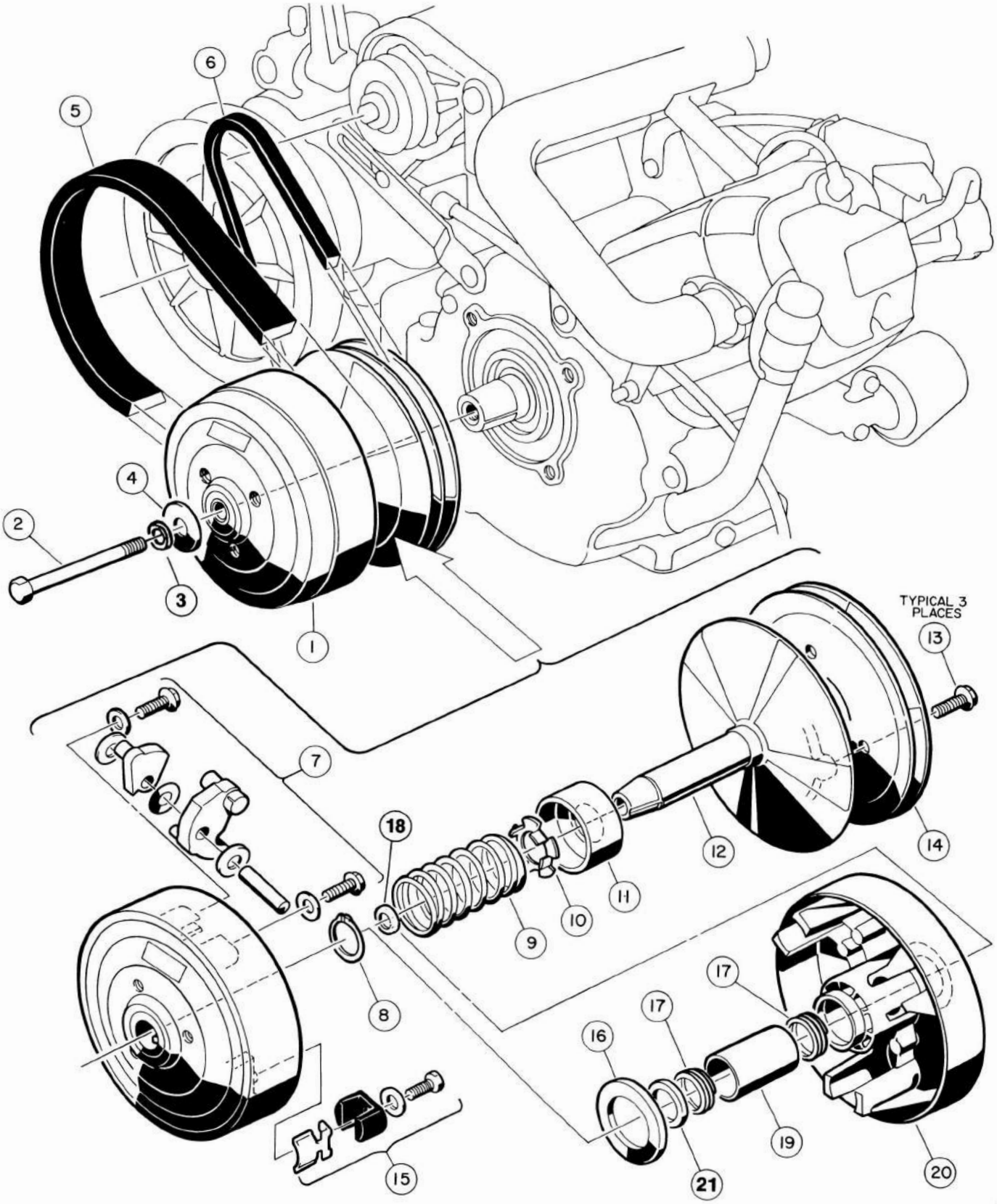

DRIVE CLUTCH ASSEMBLY

DRIVE CLUTCH ASSEMBLY

ITEM NUMBER	PART NUMBER	1 2 3 4 DESCRIPTION	UNITS PER VEHICLE
	1016378-02	DRIVE CLUTCH ASSEMBLY	
1	1014059	DRIVE HUB	1
2	1012441	3/8"-24 X 5-1/2" HEX BOLT	1
3	357	3/8" LOCKWASHER	1
4	808	3/8" TYPE B FLATWASHER	1
5	1016203	DRIVE BELT	1
6	1015241	STARTER/GENERATOR BELT	1
7	1016801	DRIVE CLUTCH WEIGHT KIT — OHV	1
8	1014057	RETAINING RING	1
9	1014051	SPRING — DRIVE CLUTCH	1
10	1014050	SPRING RETAINER	1
11	1014049	IDLER BEARING	1
12	1014451	FIXED FACE — DRIVE	1
		INCLUDES ITEMS 12, 13 AND 14	
15	1014453	DRIVE CLUTCH BUTTON KIT	1
16	1014058	THRUST WASHER	1
17	1014056	SPIRAL — BACK-UP RING	2
18	1016289	SPACER — NYLON	1
20	1014052	MOVABLE FACE ASSEMBLY	1
		INCLUDES ITEMS 19 AND 21	
21	1014055	RETAINER	

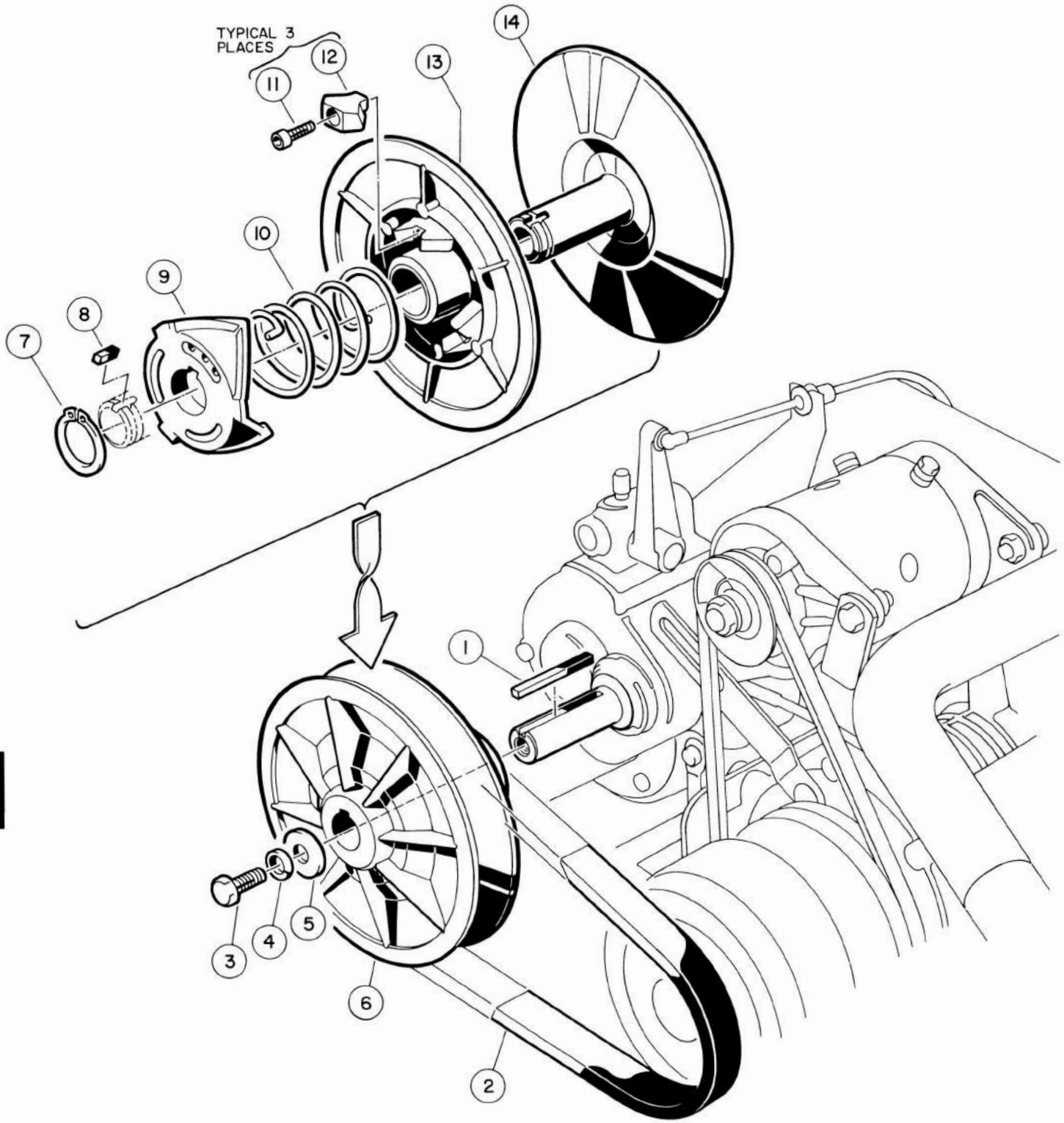

DRIVEN CLUTCH ASSEMBLY

DRIVEN CLUTCH ASSEMBLY

ITEM NUMBER	PART NUMBER	1 2 3 4 DESCRIPTION	UNITS PER VEHICLE
	1016360-02	DRIVEN CLUTCH ASSEMBLY	
1	1012455	SHAFT KEY	1
2	1016203	DRIVE BELT	1
3	7173	HEX HEAD BOLT, 5/16-18 X 3/4	1
4	7174	LOCKWASHER, 5/16" DIAMETER	1
5	1012571	HEAVY FLATWASHER, 5/16" DIAMETER	1
6	1016360-02	DRIVEN CLUTCH ASSEMBLY	1
		INCLUDES ITEMS 7 THRU 14	
7	1014080	RETAINING RING	1
8	1014078	SHORT KEY	1
9	1014077	CAM	1
10	1016665	90° SPRING	1
11	1012836	SOC HEAD CAP SCREW, #8-32 X 3/4	3
12	1014076	DRIVE BUTTON	3
13	1014072	MOVABLE FACE ASSEMBLY	1
14	1014070	FIXED FACE ASSEMBLY	1
	1014454	DRIVEN CLUTCH BUTTON KIT	1
		INCLUDES ITEMS 11 AND 12	

G

9

Section 10

TRANSMISSION AND GOVERNOR

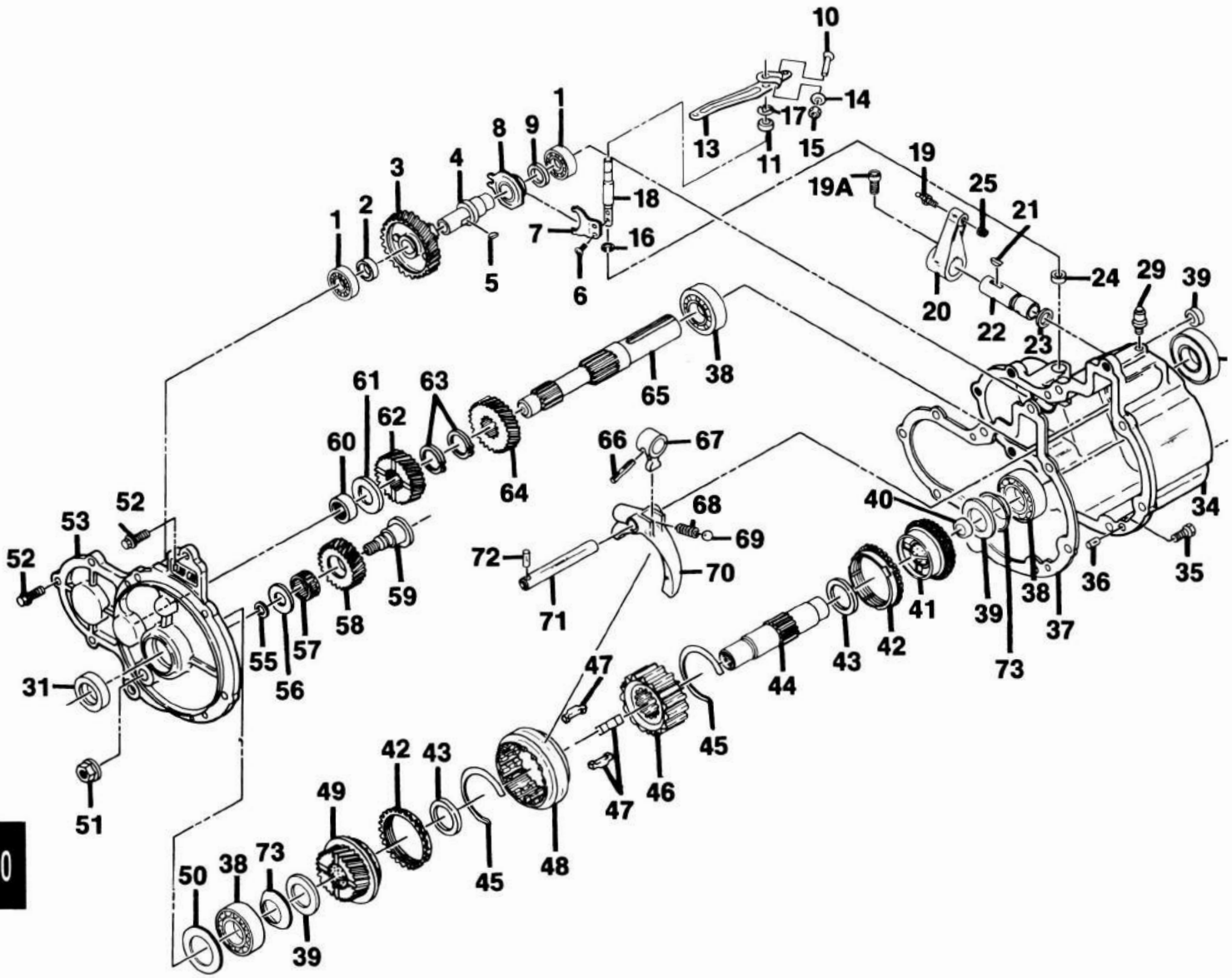

TRANSMISSION AND GOVERNOR ASSEMBLY

TRANSMISSION AND GOVERNOR ASSEMBLY

ITEM NUMBER	PART NUMBER	1 2 3 4 DESCRIPTION	UNITS PER VEHICLE
	1015747	TRANSMISSION ASSEMBLY	1
1	1012761	BALL BEARING	2
2	1012759	SPACER-THICK	1
3	1012755	GOVERNOR GEAR, 41 TOOTH	1
4	1016598	GOVERNOR SHAFT	1
5	1012760	GOVERNOR SHAFT KEY	1
6	1012764	SCREW, M4 X 0.7 X 6MM	2
7	1012763	GOVERNOR ARM, INTERNAL	1
8	1012757	GOVERNOR SLEEVE	1
9	1012758	SPACER-THIN	1
10	1016540	BOLT, M6 X 1 X 25MM HEX	1
11	1012772	GOVERNOR ARM PIVOT	1
13	1015710	GOVERNOR ARM, EXTERNAL	1
14	1016513	WASHER, FLAT	1
15	1012770	NUT, M6 X 1	1
16	1012766	SNAP RING	2
17	1012765	WASHER	1
18	1012762	GOVERNOR ARM SHAFT	1
19	1010954	BALL STUD	1
19A	1012602	CAP SCREW, SOCKET HEAD, 10-24 X 3/8"	1
20	1016341	TRANSMISSION SHIFTER LEVER	1
21	1012753	SHIFTER SHAFT KEY	1
22	1012751	SHIFTER SHAFT	1
23	1012754	O-RING	1
24	1012767	OIL SEAL	1
25	8717	LOCKNUT, 1/4-28 NYLON	1
29	1012711	BREATHER	1
30	1012714	OIL SEAL	2
32	1013759	DRAIN PLUG WITH GASKET	1
34	1013960	GEAR CASE	1
35	1012719	BOLT, M6 X 1 X 14MM HEX	1
36	1012710	DOWEL PIN	2
37	1012717	CASE GASKET	1
38	7336	BALL BEARING	3
39	1016337	THRUST WASHER	2
40	1012735	PLUG	2
41	1016591	GEAR ASSEMBLY, 28 TOOTH	1
42	1012742	SYNCHRONIZER RING	2
43	1012743	THRUST WASHER	2
44	1012734	OUTPUT SHAFT	1
45	1012741	SYNCHRO SPRING	2
46	1012738	CLUTCH HUB	1
47	1012740	SYNCHRO INSERT	3
48	1012739	SLEEVE	1
49	1012737	GEAR ASSEMBLY, 34 TOOTH	1
50	1012783	SHIM 0.2MM	A/R
50	1012784	SHIM 0.1MM	A/R
51	1012733	FLANGE NUT, M12 X 1.25	1
52	1012718	BOLT, M6 X 1 X 20MM HEX	4
53	1012715	COVER	1
55	1012732	O-RING	1
56	1012730	THRUST WASHER	1
57	1012731	NEEDLE BEARING	1
58	1012729	REVERSE IDLER GEAR	1
59	1012728	IDLER SHAFT	1
60	1012716	NEEDLE BEARING	1
61	1012723	THRUST WASHER, 3.0MM	A/R
61	1012724	THRUST WASHER, 3.3MM WHITE	A/R
61	1012725	THRUST WASHER, 3.6MM YELLOW	A/R
62	1012722	GEAR, 25 TOOTH	1
63	1012727	SNAP RING	2
64	1016594	GEAR, 29 TOOTH	1
65	1012720	INPUT SHAFT	1
66	1012752	ROLL PIN	1
67	1012750	SHIFTER ARM LEVER, INSIDE	1
68	1012748	SHIFTER SPRING	1
69	1012747	SHIFTER BALL	1
70	1012746	SLEEVE SHIFT ARM	1
71	1012745	SHIFT ROD	1
72	1012749	ROLL PIN	1
73	1016338	BELLEVILLE SPRING	2

Section 11

REAR SUSPENSION

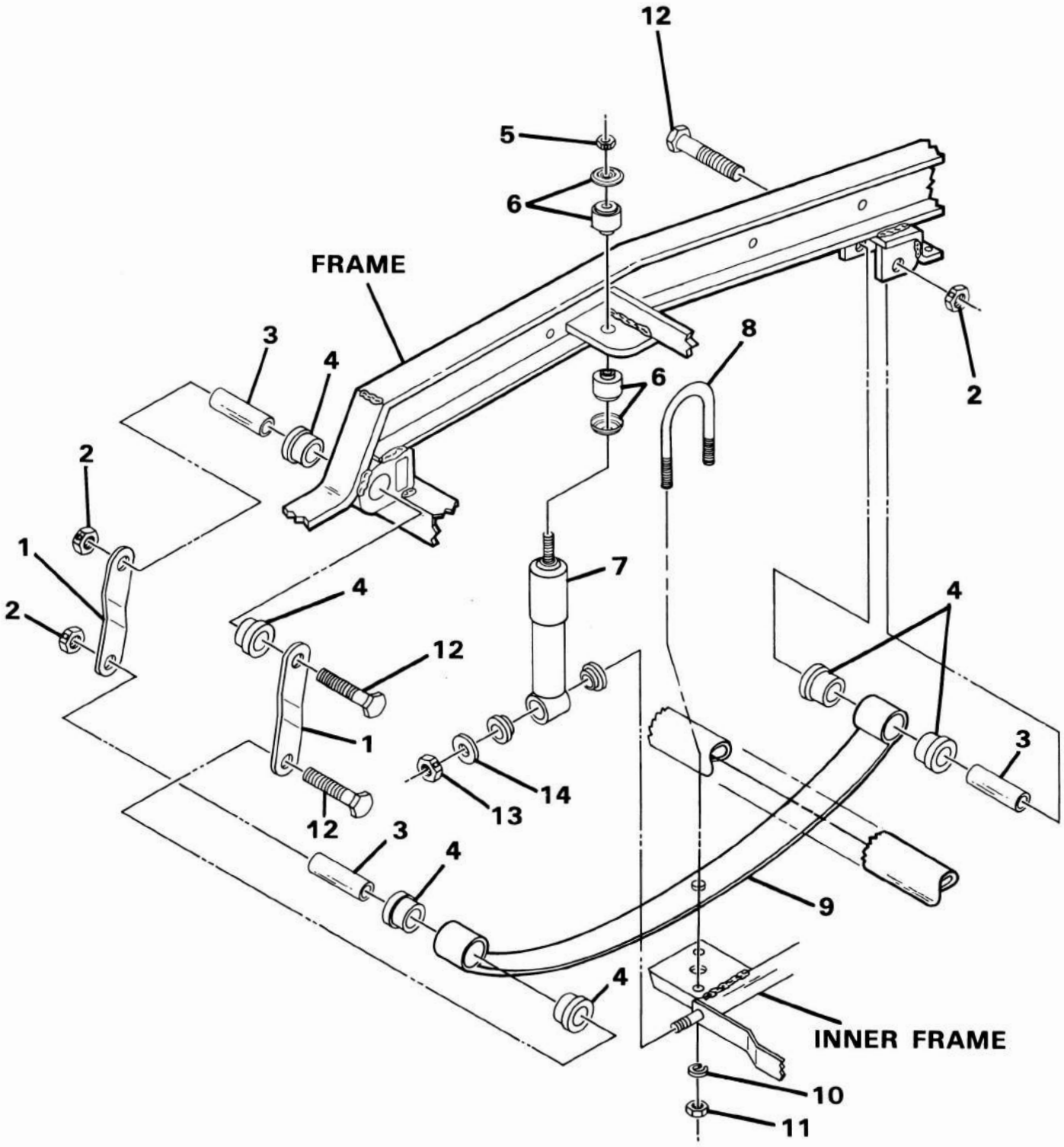

REAR SUSPENSION ASSEMBLY

REAR SUSPENSION ASSEMBLY

ITEM NUMBER	PART NUMBER	1 2 3 4 DESCRIPTION	UNITS PER VEHICLE
1	1012304	REAR SPRING SHACKLE	4
2	1010138	DIMPLED LOCKNUT, 3/8-16 UNC	6
3	1012303	STEEL BUSHING	4
4	1015583	URETHANE BUSHING	12
5	1010145	NUT, 3/8-24 UNC HEX	2
6	1011415	SHOCK ABSORBER CUSHION KIT	2
7	1014234	SHOCK ABSORBER KIT INCLUDES ITEM 6	1
8	1012180	"U" BOLT	2
9	1012324	REAR SPRING	2
10	357	LOCKWASHER, 3/8	4
11	706	NUT, 3/8-16 UNC HEX	8
12	8755	BOLT, HEX, 3/8-16 UNC X 3-3/8"	6
13	1010188	DIMPLED LOCKNUT, 5/8-11	2
14	1010193	FLATWASHER, 5/8	2
15	1012781	SHOCK ABSORBER KIT INCLUDES ITEMS 6 AND 7	1

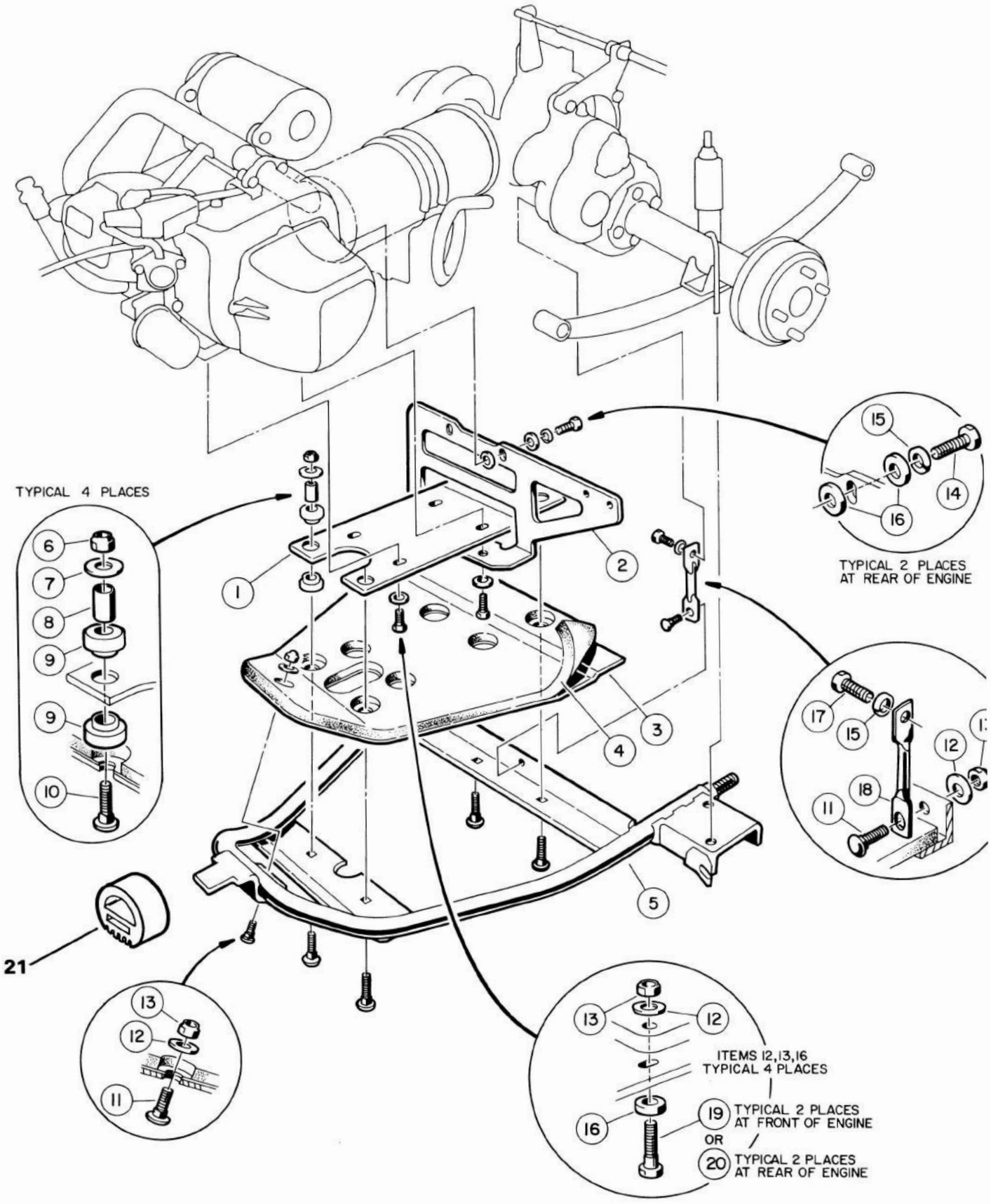

INNER FRAME ASSEMBLY

INNER FRAME ASSEMBLY

ITEM NUMBER	PART NUMBER	1 2 3 4 DESCRIPTION	UNITS PER VEHICLE
1	1016869	ENGINE MOUNTING PLATE	1
2	1016206	MUFFLER MOUNTING PLATE	1
3	1016196	BELLY PAN	1
4	1016197	SOUND INSULATION	1
5	1016870	INNER FRAME	1
6	8754	NYLON LOCKNUT, 3/8-16	4
7	808	FLATWASHER	4
8	1012291	STEEL BUSHING	4
9	1012290	ENGINE MOUNTS	8
10	1012428	ROUND HEAD SQUARE NECK BOLT, 3/8-16 X 2-1/4	4
11	1015932	ROUND HEAD SQUARE NECK BOLT, 5/16-18 X 1	2
12	1241	FLATWASHER, 5/16" DIAMETER	6
13	7473	NYLON LOCKNUT, 5/16-18	6
14	1015709	HEX HEAD CAP SCREW, M8-1.25 X 30MM	2
15	7174	LOCKWASHER, 5/16" DIAMETER	3
16	1012571	HEAVY FLATWASHER, 5/16" DIAMETER	8
17	1010577	HEX HEAD SCREW, 5/16-18 X 1-1/2	1
18	1016200-01	TRANSMISSION STRAP	1
19	8963	HEX HEAD BOLT, 5/16-18 X 1-3/4	2
20	8916	HEX HEAD CAP SCREW, 5/16-18 X 2	2
21	1012164	SNUBBER	1

Section 12

ELECTRICAL

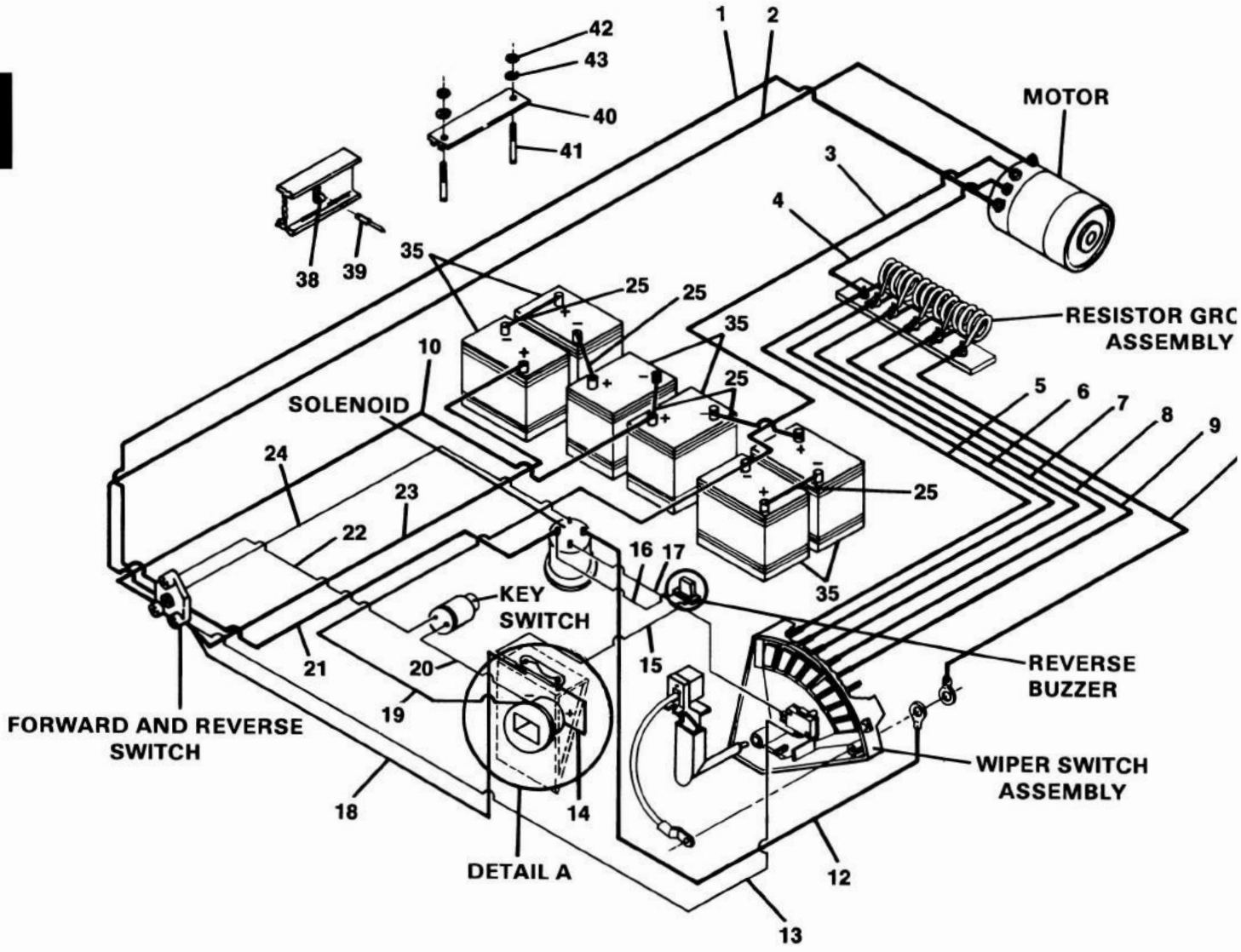

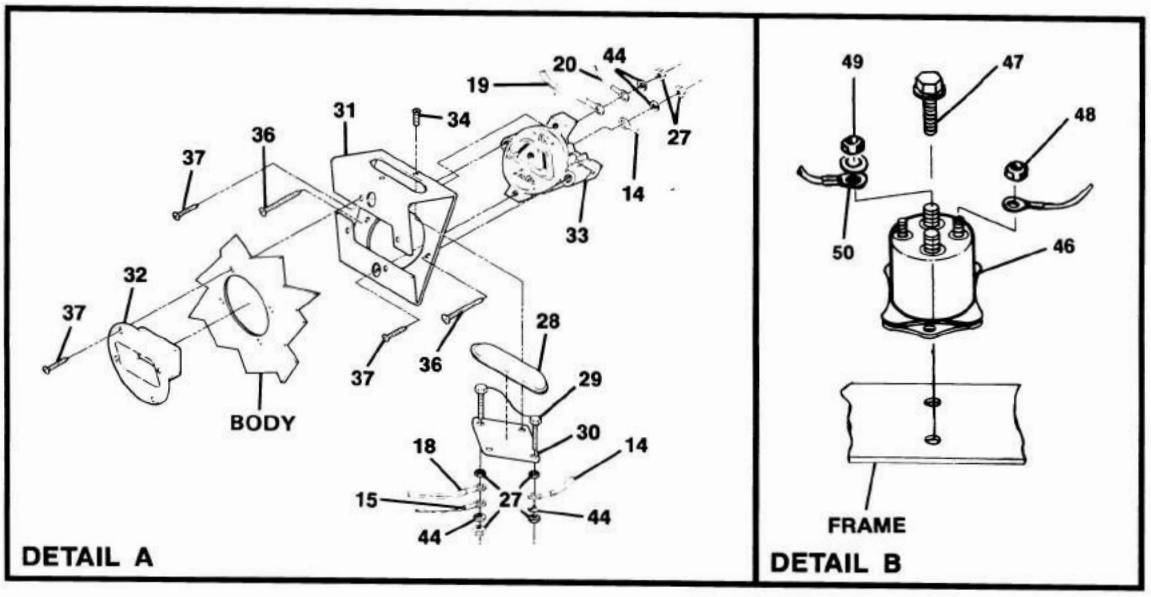

POWER WIRING — ELECTRIC VEHICLE

POWER WIRING — ELECTRIC VEHICLE

ITEM NUMBER	PART NUMBER	1 2 3 4 DESCRIPTION	UNITS PER VEHICLE
1	1016070	WIRE ASSEMBLY #6 BROWN	1
2	1016069	WIRE ASSEMBLY #6 PURPLE	1
3	1012651	WIRE ASSEMBLY #6 BLACK	1
4	1016068	WIRE ASSEMBLY #6 GREY	1
5	1014036	WIRE ASSEMBLY #6 BLACK	1
6	1014035	WIRE ASSEMBLY #6 BLUE	1
7	1014034	WIRE ASSEMBLY #6 GREEN	1
8	1014033	WIRE ASSEMBLY #6 YELLOW	1
9	1014032	WIRE ASSEMBLY #6 ORANGE	1
10	1014828	WIRE ASSEMBLY #6 GREEN	1
11	1014030	WIRE ASSEMBLY #6 WHITE	1
12	1014029	WIRE ASSEMBLY #6 WHITE	1
13	1014022	WIRE ASSEMBLY #18 RED	1
14	1013092	WIRE ASSEMBLY #10 RED	1
15	1014024	WIRE ASSEMBLY #18 ORANGE	1
16	1012230	WIRE ASSEMBLY #18 WHITE	1
17	1014023	WIRE ASSEMBLY #18 GREEN	1
18	1012237	WIRE ASSEMBLY #10 RED	1
19	1011010	WIRE ASSEMBLY #10 WHITE	1
20	1011007	WIRE ASSEMBLY #18 RED	1
21	1014039	WIRE ASSEMBLY #6 WHITE	1
22	1011006	WIRE ASSEMBLY #18 BLUE	1
23	1011069	WIRE ASSEMBLY #6 RED	1
24	1014040	WIRE ASSEMBLY #18 YELLOW	1
25	1010958	WIRE ASSEMBLY #6 BLACK	5
27	8797	NUT #10-32, BRASS	6
28	1012143	FUSE LENS	1
29	1012085	FUSE, 80 AMP	1
30	1012142	FUSE HOLDER	1
31	1013628	FUSE AND RECEPTACLE MOUNTING BRACKET	1
32	1013649	RECEPTACLE BEZEL	1
33	4107	CHARGER RECEPTACLE	1
34	1013266	SCREW, PHILLIPS HEAD, TYPE BT, #8-18 X 1/2"	2
35	1016616-01	CLUB CAR 6 VOLT BATTERY	6
36	8795	SELF TAPPING SCREW, PHILLIPS PAN HEAD # 7 X 1-3/4"	2
37	1017183	SELF TAPPING SCREW, PHILLIPS PAN HEAD # 7 X 3/4"	6
38	1012022	CABLE CLAMP	3
39	1606	POP RIVET, 3/16"	3
40	1010908	BATTERY HOLD DOWN	3
41	1013683	"J" BOLT	6
42	1014305	HEX NUT, 5/16-18 UNC S.S.	18
43	1011578	FLATWASHER, TYPE B, 5/16"	6
44	1016	#10 SPLIT LOCKWASHER	4
45	1014516	FUSE LINK KIT (NOT SHOWN) INCLUDES ITEMS 27, 28, 29, 30 AND 44	1
46	8016	SOLENOID — 36 VOLT	1
47	1012285	1/4-20 X 5/8" THREAD ROLLING SCREW	2
48	7893	#10-32 HEX NUT	2
49	1242	5/16 X 18 HEX NUT	2
50	7174	WASHER, 5/16 HELICAL SPRING	2

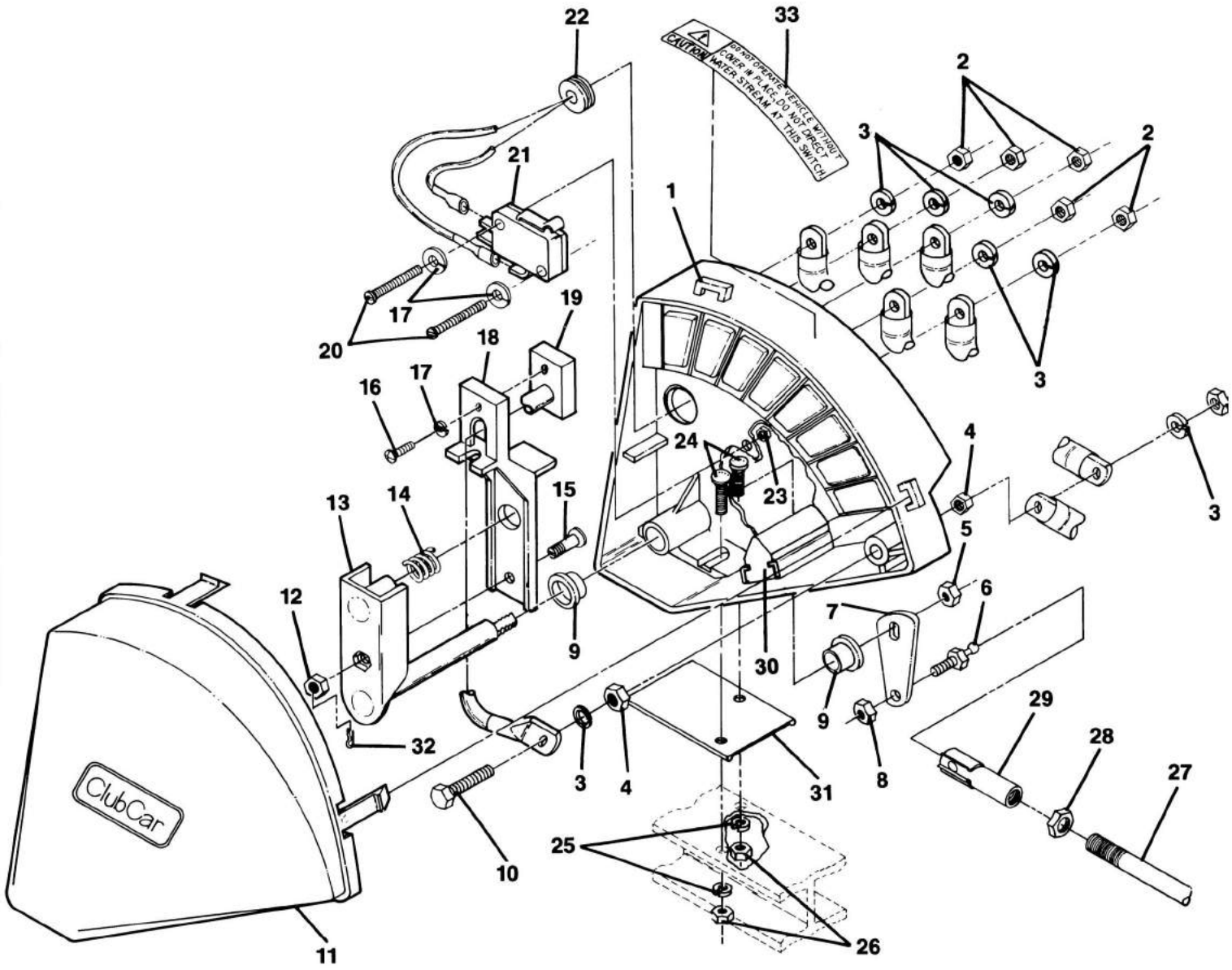

V-GLIDE WIPER SWITCH

V-GLIDE WIPER SWITCH

ITEM NUMBER	PART NUMBER	1 2 3 4 DESCRIPTION	UNITS PER VEHICLE
	1016140	V-GLIDE CONTROLLER ASSEMBLY	1
		INCLUDES ITEMS 1 THRU 23, 30, 32 AND 33	
1	1014999	SPEED CONTROLLER CASE ASSEMBLY	1
2	1014	1/4"-20 UNC HEX NUT, BRASS	5
3	451	1/4" SPLIT LOCKWASHER	7
4	1014253	1/4"-20 BRASS JAM NUT	3
5	7473	5/16"-18 UNC NYLON LOCKNUT	1
6	1012353	1/4" X 1/4"-28, SHORT BALL STUD	1
7	1014003	SPEED CONTROLLER BELL CRANK	1
8	8449	1/4"-28 DIMPLED LOCKNUT	1
9	1012903	3/8" X 1/2" FLANGE BEARING	2
10	1014189	1/4"-20 X 2.00 HEX CAP SCREW, BRONZE	1
11	1013886	SPEED CONTROLLER COVER	1
12	7893	#10-32 UNF HEX NUT	1
13	1014017	SPEED CONTROLLER SHAFT AND CARRIER	1
14	1013998	SPEED CONTROLLER BRUSH SPRING	1
15	1014000	SPEED CONTROLLER ADJUSTING STUD	1
16	1014019	#4-40 UNC TYPE "F" SCREW	1
17	8058	#4 SPLIT LOCKWASHER	3
18	1013887	SPEED CONTROLLER ARM	1
19	1013860	SPEED CONTROLLER BRUSH	1
20	8056	#4-40 UNC X 3/4" ROUND HEAD SCREW	2
21	1014807	LIMIT SWITCH	1
22	1014010	SPLIT GROMMET	1
23	8057	#4-40 UNC HEX NUT	2
24	1014109	#10-24 X 3/4" ROUND HEAD BOLT	2
25	1016175	#10 SPLIT LOCKWASHER	2
26	1017	#10 HEX NUT	2
27	1014016	ACCELERATOR ROD	1
28	1011084	1/4-28 JAM NUT	2
29	1011734	BALL JOINT	2
30	1014414	BUMPER, SPEED CONTROLLER	1
31	1014367	SHIM, SPEED CONTROLLER	1
32	1014413	HAIR SPRING COTTER PIN	1
33	1014660	SPEED CONTROLLER DECAL	1

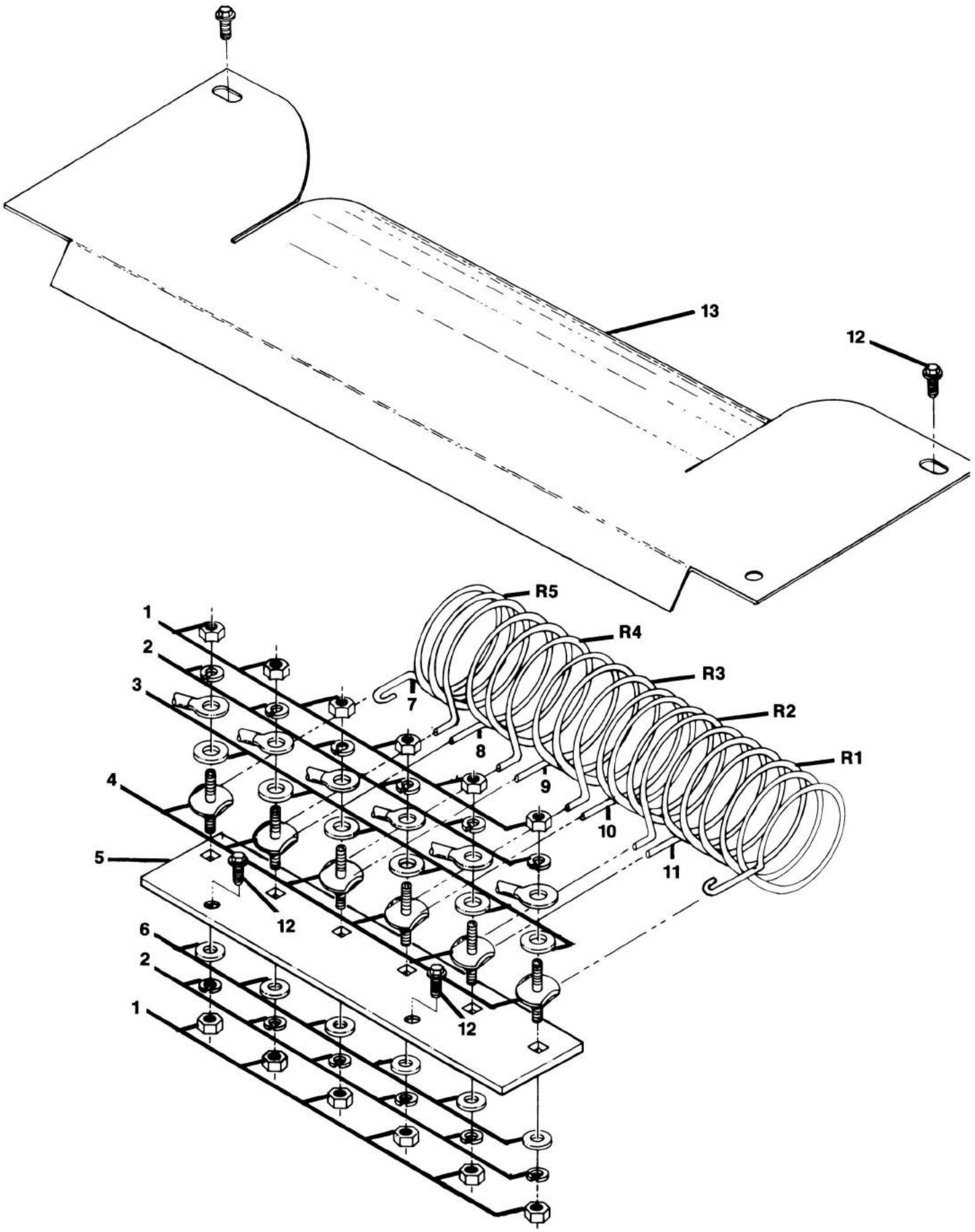

RESISTOR AND BOARD ASSEMBLY — V-GLIDE

RESISTOR AND BOARD ASSEMBLY — V-GLIDE

ITEM NUMBER	PART NUMBER	1 2 3 4 DESCRIPTION	UNITS PER VEHICLE
1	1028	1/4"-20 UNC HEX NUT	12
2	451	1/4" SPLIT LOCKWASHER	12
3	1014306	1/4" WIDE FLATWASHER	6
4	1014045	RESISTOR COIL STANDOFF	6
5	1014728	RESISTOR MOUNTING BOARD	1
6	332	1/4" FLATWASHER	6
7	1014655	RESISTOR COIL	1
8	1014654	RESISTOR COIL	1
9	1014013	RESISTOR COIL	1
10	1014014	RESISTOR COIL	1
11	1014729	RESISTOR COIL	1
12	1012285	1/4-20 UNC X 5/8" THREAD ROLLING SCREW	4
13	1013971	RESISTOR SHIELD	1

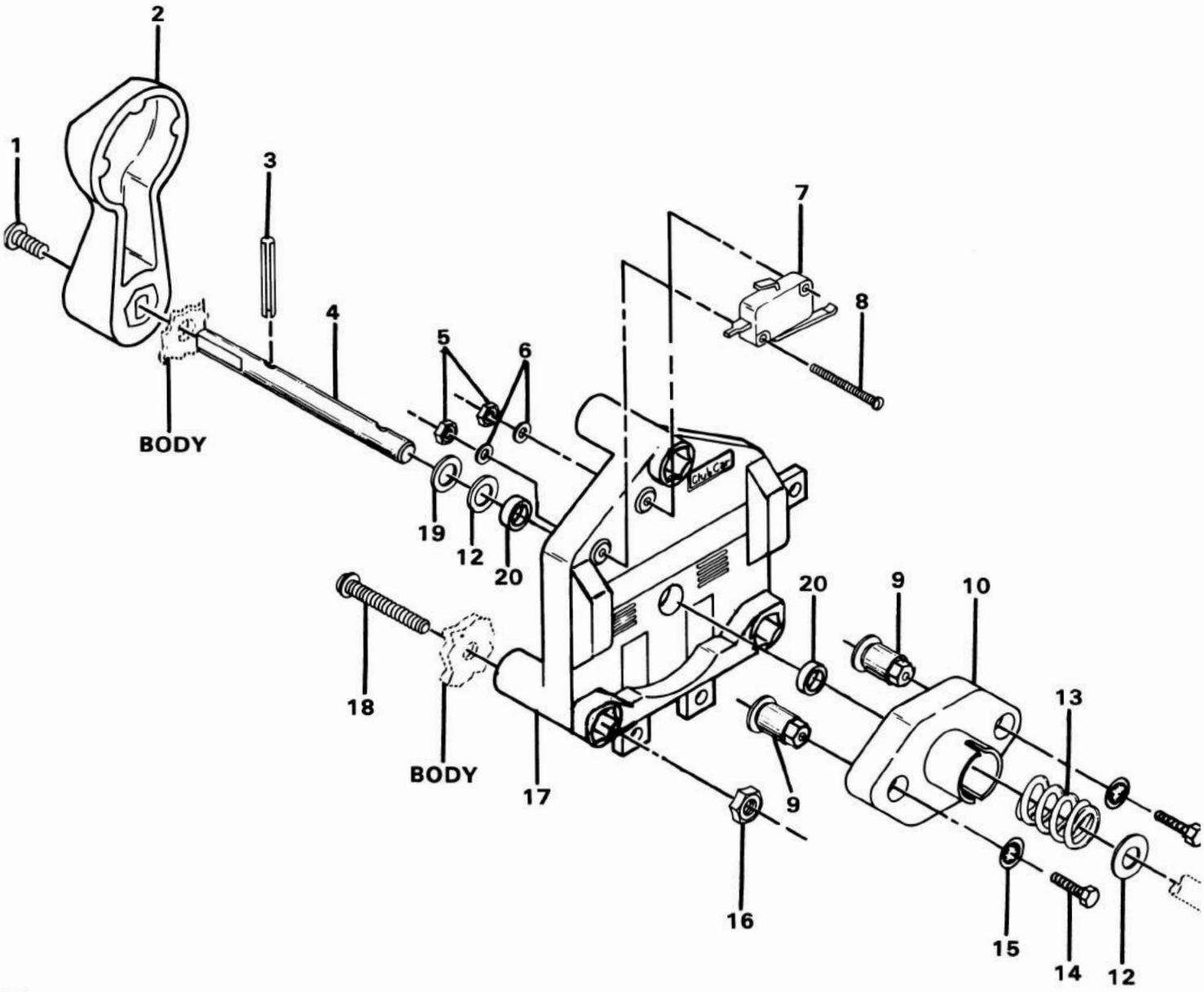

FORWARD AND REVERSE SWITCH ASSEMBLY — V-GLIDE

FORWARD AND REVERSE SWITCH ASSEMBLY — V-GLIDE

ITEM NUMBER	PART NUMBER	1 2 3 4 DESCRIPTION	UNITS PER VEHICLE
	1011997	FORWARD AND REVERSE SWITCH ASSEMBLY COMPLETE EXCLUDING ITEMS 1 AND 2 AND MOUNTING HARDWARE, ITEMS 14, 15, 16 AND 18	1
1	1013198	SCREW, PHILLIPS MACHINE, #8-32	1
2	1012987	SWITCH HANDLE, FORWARD AND REVERSE	1
3	1231	ROLL PIN, 1/8 X 1"	1
4	1012988	SHAFT, FORWARD AND REVERSE SWITCH	2
5	8057	NUT, HEX, #4-40 UNC	2
6	8058	LOCKWASHER, #4	1
7	1014808	LIMIT SWITCH, FORWARD AND REVERSE	2
8	1011991	SCREW, SLOTTED ROUND HEAD, #4-40 X 1-1/8"	2
9	8793	ROTOR CONTACT	1
10	1016130	SWITCH ROTOR, FORWARD AND REVERSE	1
11	1011993	ROLL PIN, 3/16" X 1-3/8"	2
12	1011990	FLATWASHER, 3/8"	1
13	7627	SHAFT SPRING, FORWARD AND REVERSE	2
14	8450	SCREW, HEX HEAD MACHINE, #10-24	2
15	8049	LOCKWASHER, INTERNAL TOOTH #10	3
16	8233	LOCKNUT, NYLON, 1/4-20	1
17	1014273	SWITCH CASE, FORWARD AND REVERSE INCLUDES ITEM 20	3
18	1011988	SCREW, TRUSS HEAD PHILLIPS, 1/4-20 X 2"	1
19	1014065	WASHER, PLASTIC, 3/8"	2
20	1014145	BEARING	

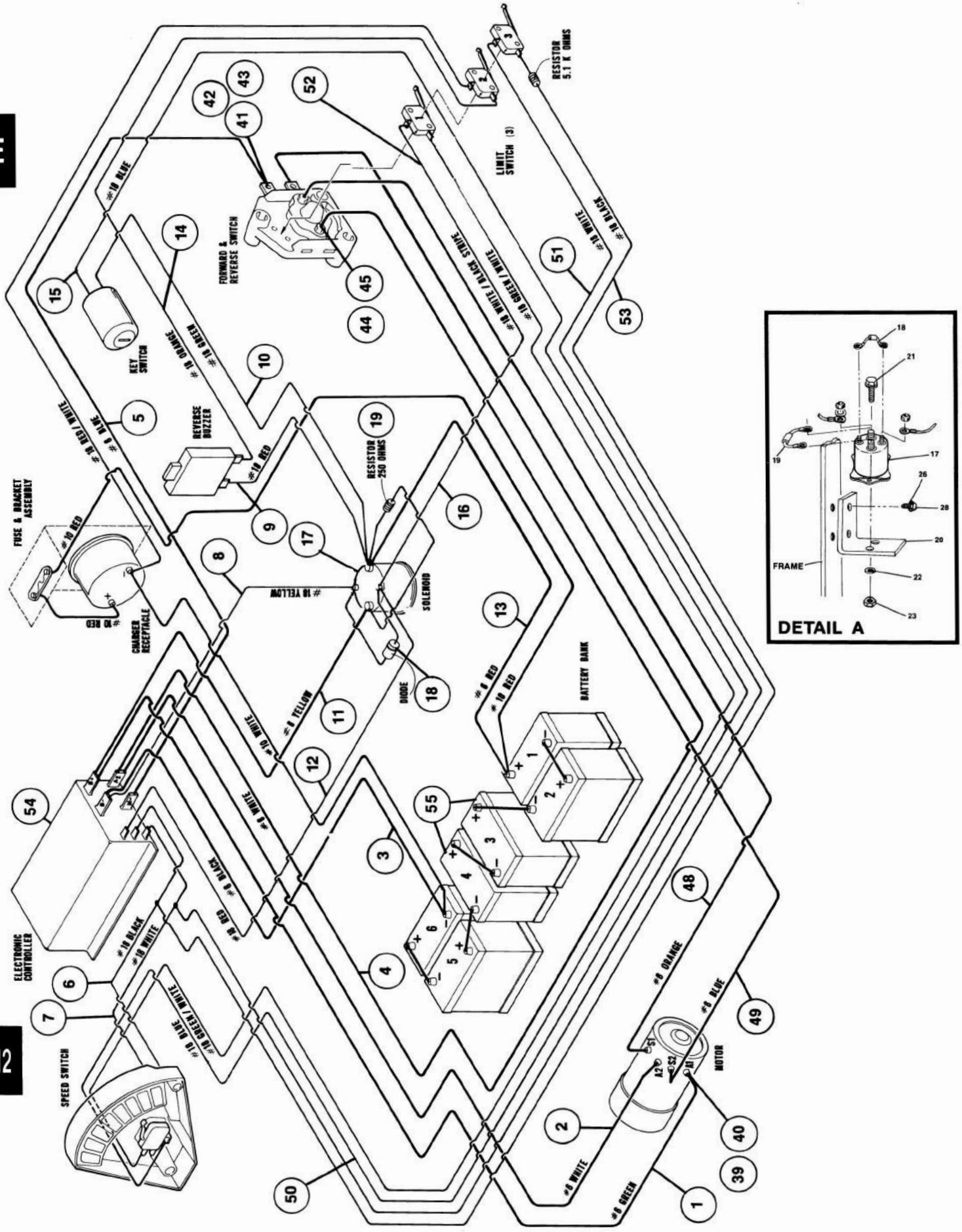

POWER WIRING — SOLID STATE CONTROLLER

POWER WIRING — SOLID STATE CONTROLLER

ITEM NUMBER	PART NUMBER	1 2 3 4 DESCRIPTION	UNITS PER VEHICLE
	1015879	CONTROLLER WIRING ASSEMBLY	1
1	1015860	WIRE ASSEMBLY #6 GREEN	1
2	1015861	WIRE ASSEMBLY #6 WHITE	1
3	1016137	WIRE ASSEMBLY #6 BLACK	1
4	1015856	WIRE ASSEMBLY #6 WHITE	1
5	1015857	WIRE ASSEMBLY #6 BLUE	1
6	1015863	WIRE ASSEMBLY #18 BLACK	1
7	1015864	WIRE ASSEMBLY #18 WHITE	1
8	1015866	WIRE ASSEMBLY #18 YELLOW	1
9	1016135	WIRE ASSEMBLY #18 RED	1
10	1016121	WIRE ASSEMBLY #18 GREEN	1
11	1015858	WIRE ASSEMBLY #6 YELLOW	1
12	1015865	WIRE ASSEMBLY #18 RED	1
13	1015859	WIRE ASSEMBLY #6 RED	1
14	1016134	WIRE ASSEMBLY #18 ORANGE	1
15	1016133	WIRE ASSEMBLY #18 BLUE	1
16	1016122	WIRE ASSEMBLY #18 BLACK/WHITE	1
17	8016	SOLENOID — 36 VOLT	1
18	1014948	DIODE ASSEMBLY	1
19	1014947	RESISTOR ASSEMBLY	1
20	1015838	SOLENOID MOUNTING BRACKET	1
21	7847	1/4-20 X 3/4 HEX HEAD SCREW (ATTACHES SOLENOID TO SOLENOID MOUNTING BRACKET)	2
22	451	1/4 HELICAL SPRING LOCKWASHER (ATTACHES SOLENOID TO SOLENOID MOUNTING BRACKET)	2
23	1028	1/4-20 HEX NUT (ATTACHES SOLENOID TO SOLENOID MOUNTING BRACKET)	2
24	1015837	MOUNTING PLATE — CONTROLLER	1
25	1014943	1/4-20 X 1-1/4 ROUND HEAD SQUARE NECK BOLT (ATTACHES CONTROLLER MOUNTING PLATE TO FRAME)	2
26	451	1/4 HELICAL SPRING LOCKWASHER (ATTACHES CONTROLLER MOUNTING PLATE TO FRAME)	2
27	1028	1/4-20 HEX NUT (ATTACHES CONTROLLER MOUNTING PLATE TO FRAME)	2
28	1012285	1/4-20 X 5/8" HEX WASHER HEAD SCREW (ATTACHES SOLENOID ASSEMBLY TO FRAME)	2
29	451	1/4 HELICAL SPRING LOCKWASHER (ATTACHES SOLENOID ASSEMBLY TO FRAME)	2
34	1014943	1/4-20 X 1.25 ROUND HEAD SQUARE NECK BOLT (ATTACHES CONTROLLER TO FRAME)	4
35	451	1/4 HELICAL SPRING LOCKWASHER (ATTACHES CONTROLLER TO FRAME)	4
36	1028	1/4-20 HEX NUT (ATTACHES CONTROLLER TO FRAME)	4
37	332	1/4 FLATWASHER (ATTACHES CONTROLLER TO FRAME)	4
38	1016631	PUSH NUT .187	4
39	7174	5/16 HELICAL SPRING LOCKWASHER (ATTACHES WIRES TO MOTOR)	4
40	1242	5/16-18 HEX NUT (ATTACHES WIRES TO MOTOR)	4
41	403	1/4-20 X 5/8" HEX HEAD BOLT (ATTACHES WIRES TO FORWARD & REVERSE CONTACT BARS)	2
42	451	1/4 LOCKWASHER (ATTACHES WIRES TO FORWARD & REVERSE CONTACT BARS)	2
43	1028	1/4-20 HEX NUT (ATTACHES WIRES TO FORWARD & REVERSE CONTACT BARS)	2
44	8450	#10-24 X 1/2" HEX HEAD SCREW (ATTACHES WIRES TO FORWARD & REVERSE ROTOR)	2
45	8049	#10 LOCKWASHER (ATTACHES WIRES TO FORWARD & REVERSE ROTOR)	2
46	1606	3/16 POP RIVET	3
47	1012022	CABLE CLAMP	3
48	1014854	WIRE ASSEMBLY #6 ORANGE	1
49	1014855	WIRE ASSEMBLY #6 BLUE	1
50	1016142	WIRE ASSEMBLY #18 BLUE	1
51	1016019	WIRE ASSEMBLY #18 WHITE	1
52	1014839	WIRE ASSEMBLY #18 GREEN/WHITE	1
53	1016018	WIRE ASSEMBLY #18 BLACK	1
54	1014749	ELECTRONIC CONTROLLER	1
55	1013697	CLUB CAR 6 VOLT BATTERY	6
56	1010908	BATTERY HOLD DOWN (NOT SHOWN)	3
57	1013683	"J" BOLT (NOT SHOWN)	6
58	1014305	HEX NUT, 5/16-18 UNC STAINLESS STEEL (NOT SHOWN)	18
59	1011578	FLATWASHER, TYPE B, 5/16" (NOT SHOWN)	6

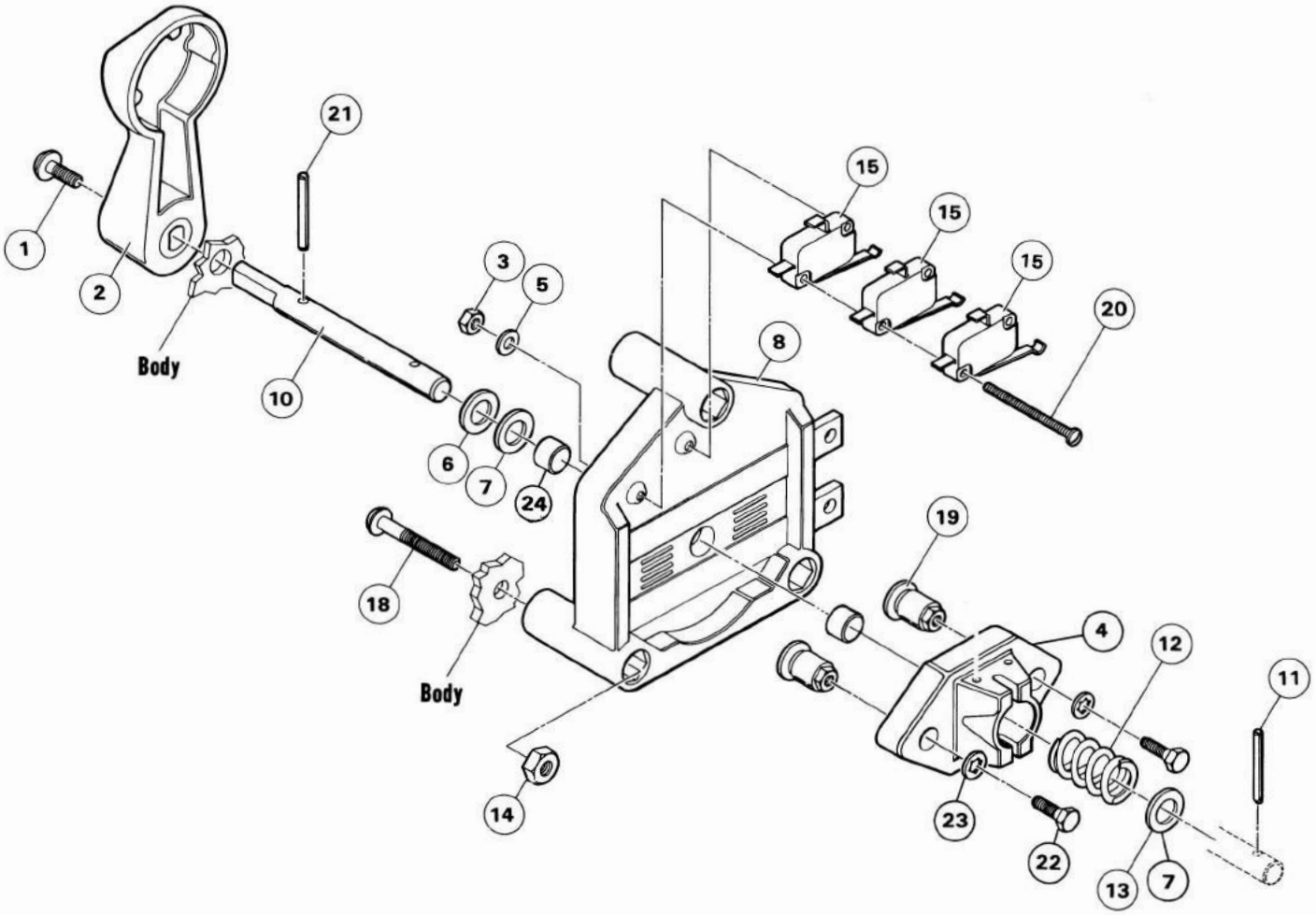

F&R SWITCH — SOLID STATE CONTROLLER

F&R SWITCH — SOLID STATE CONTROLLER

ITEM NUMBER	PART NUMBER	1 2 3 4 DESCRIPTION	UNITS PER VEHICLE
	1015846	F&R SWITCH ASSEMBLY	
1	1013198	SCREW, TRUSS HEAD	1
2	1012987	SWITCH HANDLE	1
3	8057	#4-40 UNC HEX NUT	2
4	1016130	F&R SWITCH ROTOR	1
5	8058	#4 LOCKWASHER	2
6	1014065	FLATWASHER (DELRIN)	1
7	1011990	3/8" FLATWASHER	2
8	1015830	F&R SWITCH CASE	1
9	1014145	BEARING	2
10	1012988	F&R SWITCH SHAFT	1
11	1011993	ROLL PIN 3/16" X 1.38	1
12	7627	F&R SHAFT SPRING	1
15	1014808	LIMIT SWITCH	3
18	1011988	SCREW, TRUSS HEAD PHILLIPS	3
19	8793	ROTOR CONTACT	2
20	1014871	#4-40 X 2.00 HEX WASHER HEAD SCREW	2
21	1231	ROLL PIN 1/8" X 1.00	1
22	8450	SCREW, HEX HEAD #10-34	2
23	8049	LOCKWASHER, #10 INTERNAL TOOTH	2
24	1014145	BEARING	2

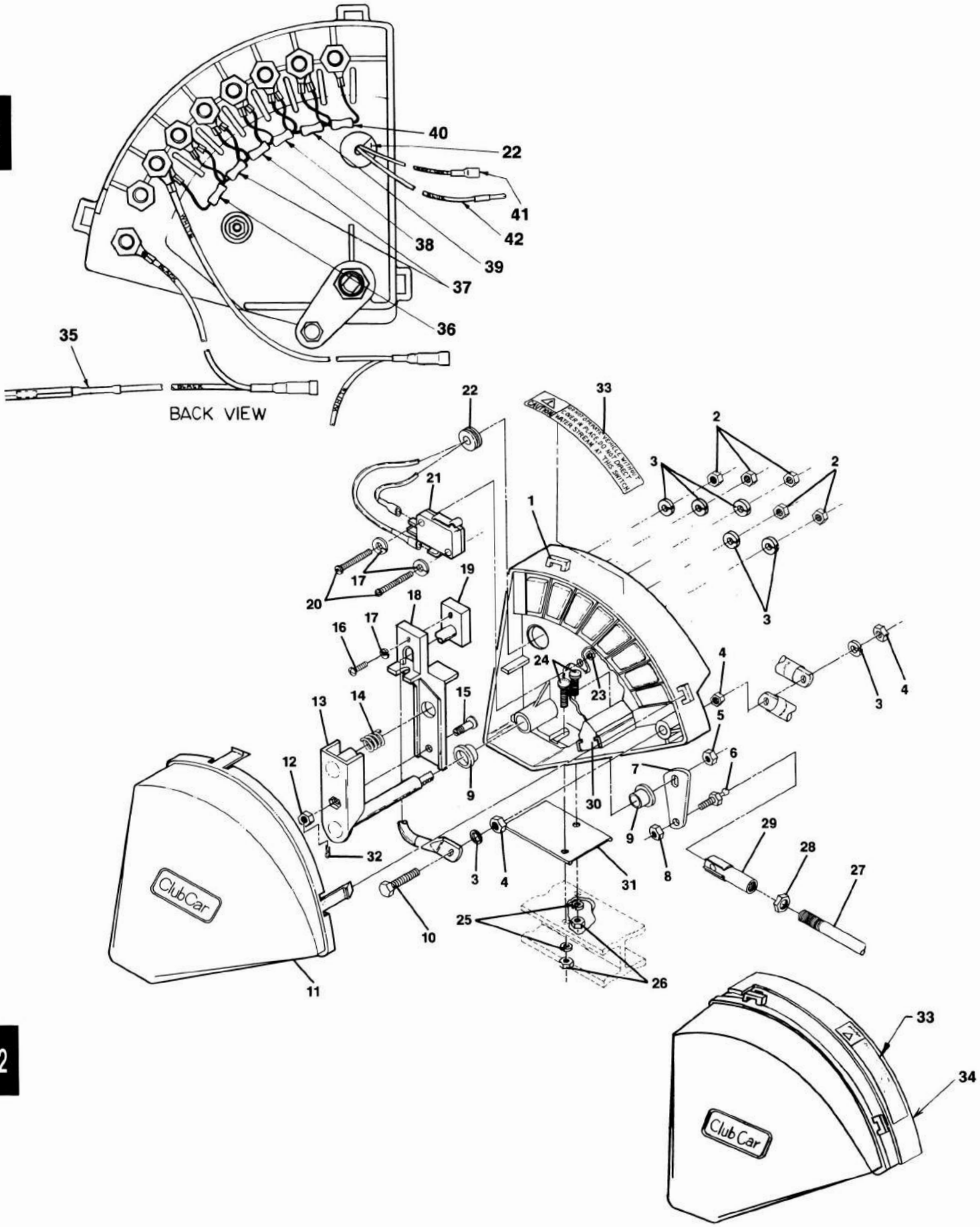

V-GLIDE WIPER SWITCH — SOLID STATE CONTROLLER

V-GLIDE WIPER SWITCH — SOLID STATE CONTROLLER

ITEM NUMBER	PART NUMBER	1 2 3 4 DESCRIPTION	UNITS PER VEHICLE
		V-GLIDE WIPER SWITCH — SOLID STATE CONTROLLER	
1	1014917	SPEED CONTROLLER CASE	1
2	1014	1/4"-20 UNC HEX NUT, BRASS	5
3	451	1/4" SPLIT LOCKWASHER	7
4	1014253	1/4"-20 BRASS JAM NUT	3
5	7473	5/16"-18 UNC NYLON LOCKNUT	1
6	1012353	1/4" X 1/4"-28, SHORT BALL STUD	1
7	1014003	SPEED CONTROLLER BELL CRANK	1
8	8449	1/4"-28 DIMPLED LOCKNUT	1
9	1012903	3/8" X 1/2" FLANGE BEARING	2
10	1014189	1/4"-20 X 2.00 HEX CAP SCREW, BRONZE	1
11	1013886	SPEED CONTROLLER COVER	1
12	7893	#10-32 UNF HEX NUT	1
13	1014017	SPEED CONTROLLER SHAFT AND CARRIER	1
14	1013998	SPEED CONTROLLER BRUSH SPRING	1
15	1014000	SPEED CONTROLLER ADJUSTING STUD	1
16	1014019	#4-40 UNC TYPE "F" SCREW	1
17	8058	#4 SPLIT LOCKWASHER	3
18	1013887	SPEED CONTROLLER ARM	1
19	1013860	SPEED CONTROLLER BRUSH	1
20	8056	#4-40 UNC X 3/4" ROUND HEAD SCREW	2
21	1014807	LIMIT SWITCH	1
22	1014010	SPLIT GROMMET	1
23	8057	#4-40 UNC HEX NUT	2
24	1014109	#10-24 X 3/4" ROUND HEAD BOLT	2
25	1016175	#10 SPLIT LOCKWASHER	2
26	1017	#10 HEX NUT	2
27	1014016	ACCELERATOR ROD	1
28	1011084	1/4-28 JAM NUT	2
29	1011734	BALL JOINT	2
30	1014414	BUMPER, SPEED CONTROLLER	1
31	1014367	SHIM, SPEED CONTROLLER	1
32	1014413	HAIR SPRING COTTER PIN	1
33	1016109	SPEED CONTROLLER DECAL	2
34	1016061	WIPER SWITCH RESISTOR PROTECTOR	1
35	1016018	WIRE ASSEMBLY #18 BLACK	1
36	1016017	RESISTOR ASSEMBLY 910Ω	1
37	1016016	RESISTOR ASSEMBLY 620Ω	2
38	1016015	RESISTOR ASSEMBLY 750Ω	1
39	1016014	RESISTOR ASSEMBLY 820Ω	1
40	1016013	RESISTOR ASSEMBLY 1100Ω	1
41	1014839	#18 GREEN/WHITE WIRE ASSEMBLY	1
42	1016142	#18 BLUE WIRE ASSEMBLY	1
44	1016092	#8-32 X .44 PAN HEAD SCREW (NOT SHOWN) (ATTACHES RESISTOR PROTECTOR #34 TO WIPER SWITCH CASE)	2
45	1013529	#8 PLAIN WASHER (NOT SHOWN) (ATTACHES RESISTOR PROTECTOR #34 TO WIPER SWITCH CASE)	4
46	1011571	#8-32 HEX NUT (NOT SHOWN) (ATTACHES RESISTOR PROTECTOR #34 TO WIPER SWITCH CASE)	2
47	1016090	#8-32 HEX MALE/FEMALE STANDOFF (NOT SHOWN) (ATTACHES RESISTOR PROTECTOR #34 TO WIPER SWITCH CASE)	2
48	1012076	#8 EXTERNAL TOOTH LOCKWASHER (NOT SHOWN) (ATTACHES RESISTOR PROTECTOR #34 TO WIPER SWITCH CASE)	4

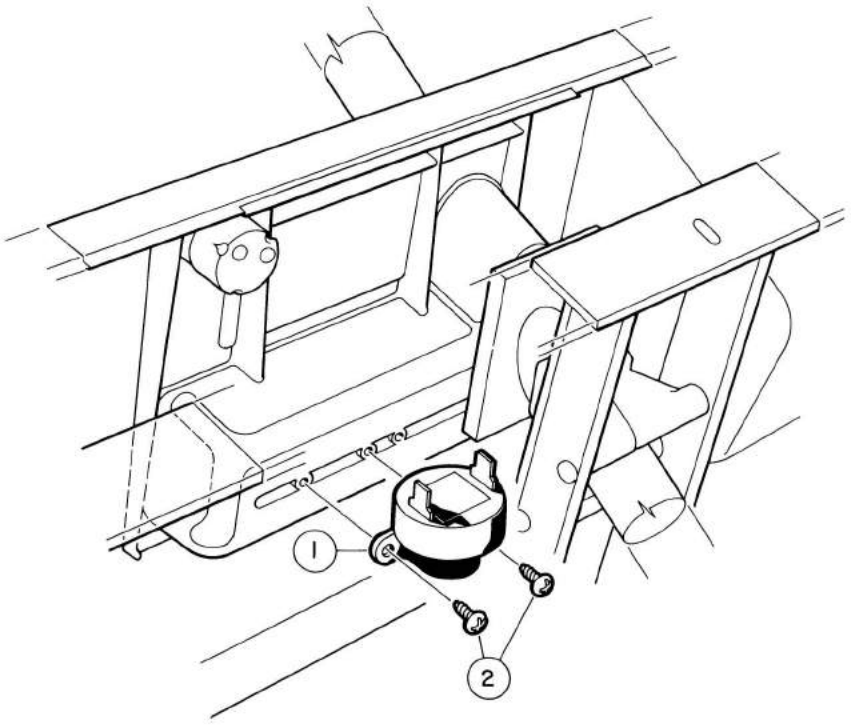

REVERSE BUZZER

ITEM NUMBER	PART NUMBER	1 2 3 4 DESCRIPTION	UNITS PER VEHICLE
1	1016851	REVERSE BUZZER	1
2	1016849	#4-24 X .330 SCREW, PAN HEAD HI-LO	2

Section 13

BATTERY CHARGER

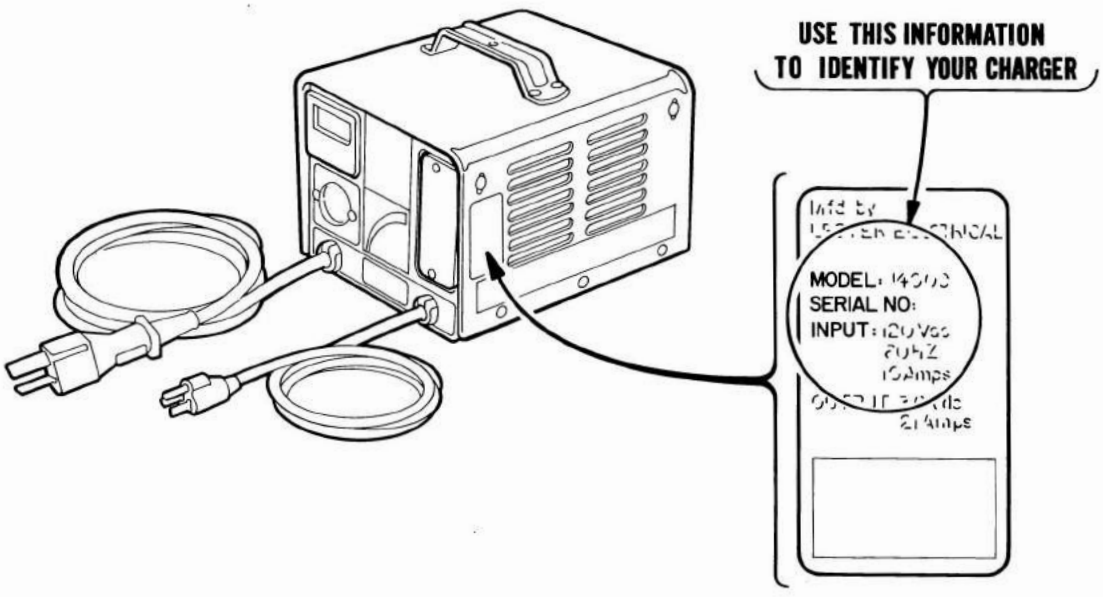

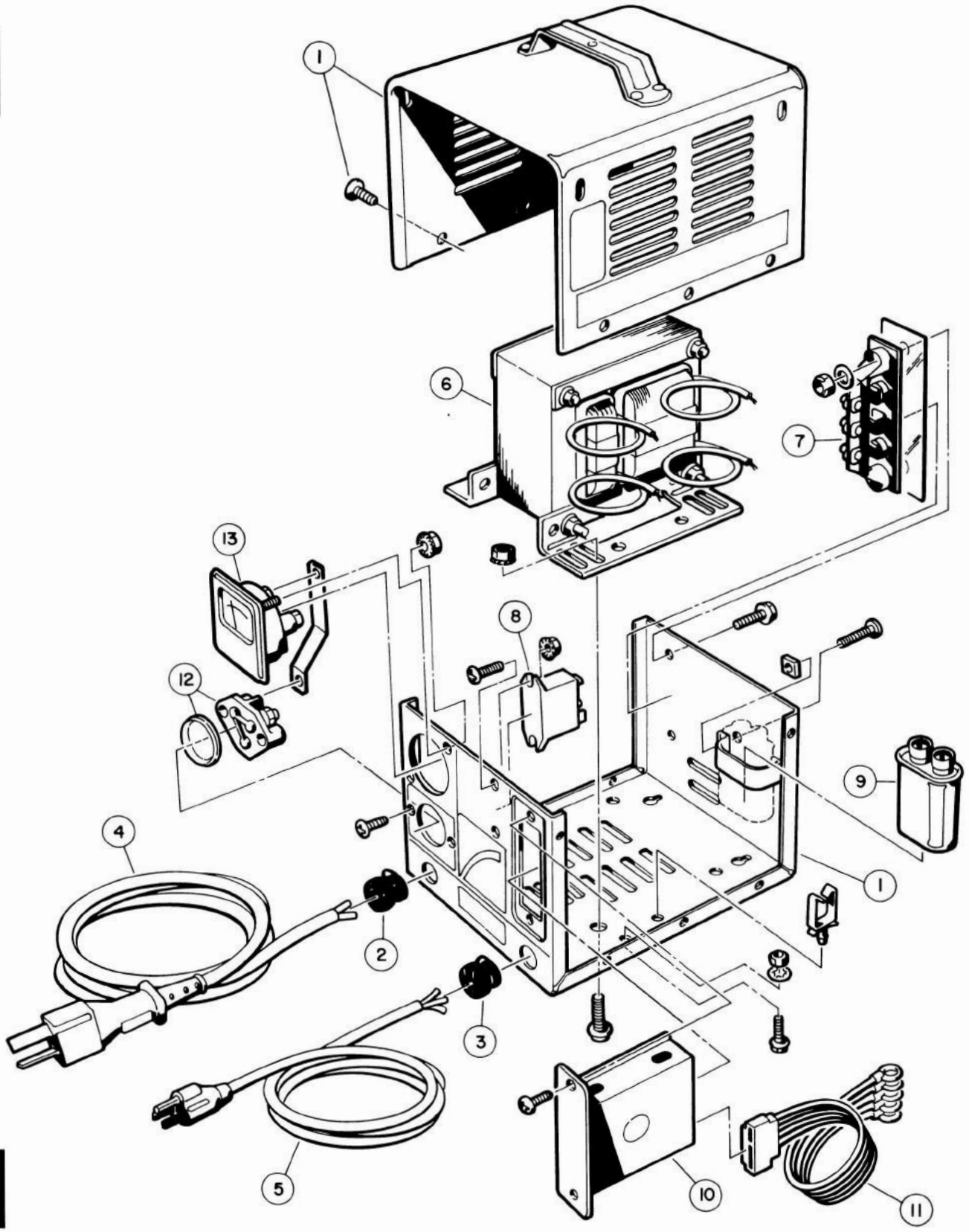

MODEL 13800 ACCU-POWER CHARGER

MODEL 13800 ACCU-POWER CHARGER

ITEM NUMBER	PART NUMBER	1 2 3 4 DESCRIPTION	UNITS PER VEHICLE
1	1015907	CASE ASSEMBLY INCLUDES FASTENERS	1
2	1012098	STRAIN RELIEF, 12 AWG DC CORD	1
2	1012042	STRAIN RELIEF, 10 AWG DC CORD	1
3	1015917	STRAIN RELIEF, AC CORD	1
4	1016433-01	DC CORDSET, 12 AWG X 110 INCHES LONG	1
4	1016433-02	DC CORDSET, 12 AWG X 146 INCHES LONG	1
4	1016433-03	DC CORDSET, 10 AWG X 242 INCHES LONG	1
4	1016433-04	DC CORDSET, 10 AWG X 110 INCHES LONG	1
5	1015916-01	AC CORDSET, 16 AWG X 80 INCHES LONG	1
5	1015916-02	AC CORDSET, 16 AWG X 110 INCHES LONG	1
6	1015912	TRANSFORMER ASSEMBLY	1
7	1015914	HEATSINK ASSEMBLY WITH DIODES	1
8	1015911	36 VDC RELAY	1
9	1015910	CAPACITOR	1
10	1015906	TIMER KIT ASSEMBLY	1
11	1015913	CONTROL CABLE ASSEMBLY	1
12	1012101	FUSE ASSEMBLY	1
13	1015905	AMMETER	1
	1016464	ACCU-POWER CHARGER ASSEMBLY INCLUDES ITEMS 1 THRU 3, 6 THRU 13, 1 OF ITEMS 4 AND 5	

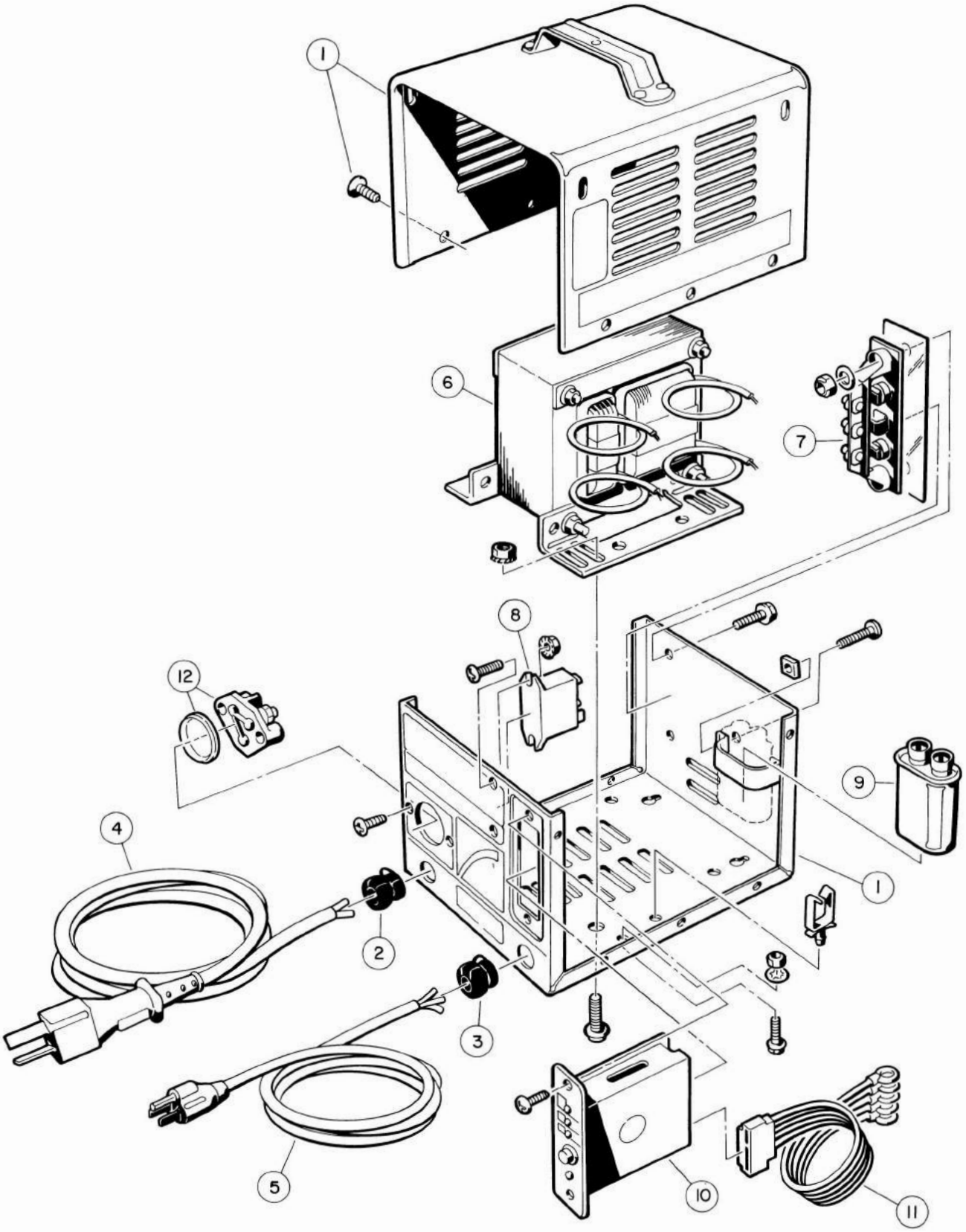

MODEL 14000 ULTRA-POWER CHARGER

MODEL 14000 ULTRA-POWER CHARGER

ITEM NUMBER	PART NUMBER	1 2 3 4 DESCRIPTION	UNITS PER VEHICLE
1	1015909	CASE ASSEMBLY INCLUDES FASTENERS	1
2	1012098	STRAIN RELIEF, 12 AWG DC CORD	1
2	1012042	STRAIN RELIEF, 10 AWG DC CORD	1
3	1015917	STRAIN RELIEF, AC CORD	1
4	1016433-01	DC CORDSET, 12 AWG X 110 INCHES LONG	1
4	1016433-02	DC CORDSET, 12 AWG X 146 INCHES LONG	1
4	1016433-03	DC CORDSET, 10 AWG X 242 INCHES LONG	1
4	1016433-04	DC CORDSET, 10 AWG X 110 INCHES LONG	1
5	1015916-01	AC CORDSET, 16 AWG X 80 INCHES LONG	1
5	1015916-02	AC CORDSET, 16 AWG X 110 INCHES LONG	1
6	1015912	TRANSFORMER ASSEMBLY	1
7	1015914	HEATSINK ASSEMBLY WITH DIODES	1
8	1015911	36 VDC RELAY	1
9	1015910	CAPACITOR	1
10	1015908	TIMER KIT ASSEMBLY	1
11	1015913	CONTROL CABLE ASSEMBLY	1
12	1012101	FUSE ASSEMBLY	1
	1016463	ULTRA-POWER CHARGER ASSEMBLY INCLUDES ITEMS 1 THRU 3, 6 THRU 12, 1 OF ITEMS 4 AND 5	

Section 14

MOTOR

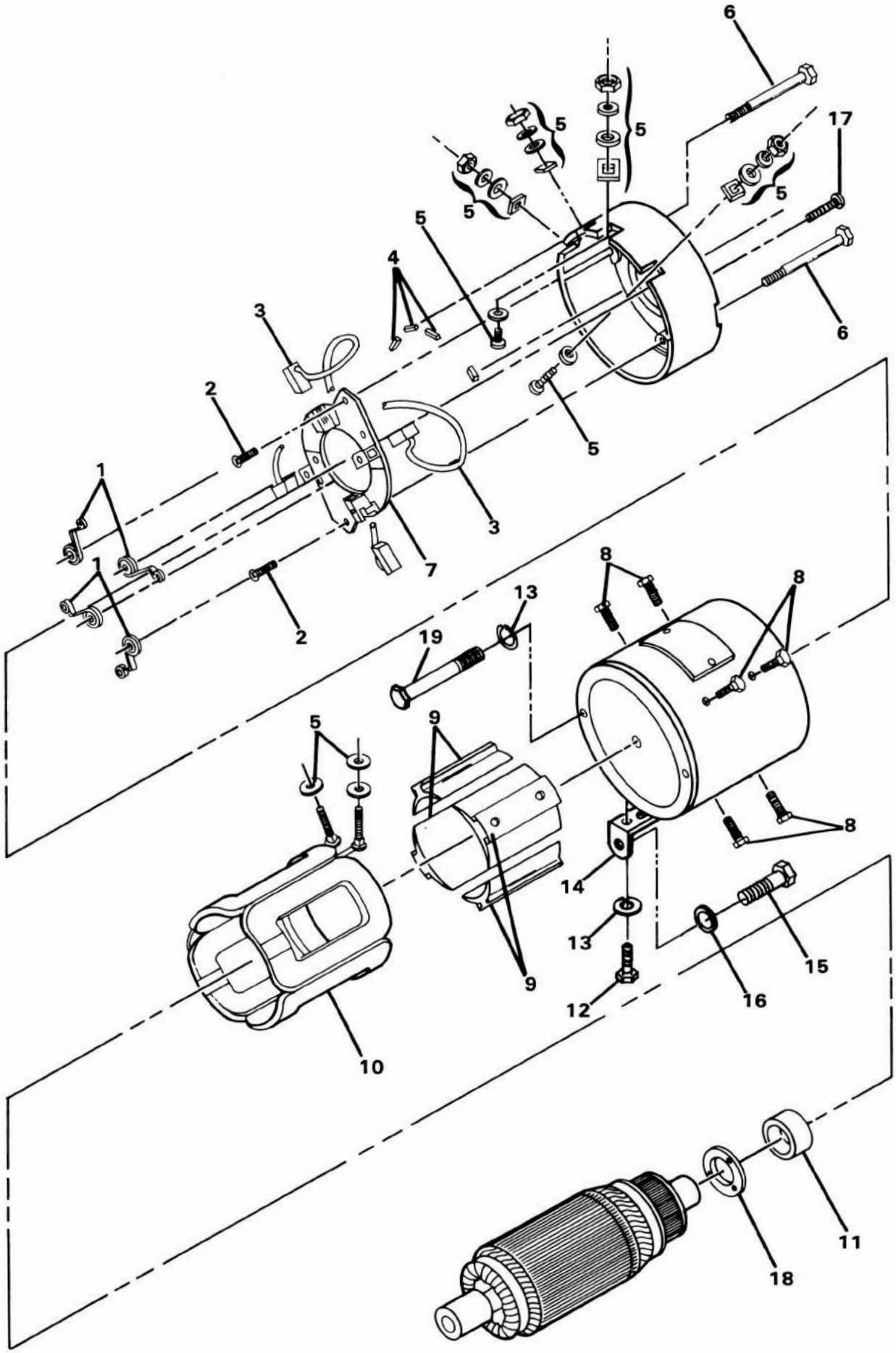

MOTOR ASSEMBLY FOR CLUB CAR MODELS 1012191 AND 1014678

MOTOR ASSEMBLY FOR CLUB CAR MODELS 1012191 AND 1014678

ITEM NUMBER	PART NUMBER	1 2 3 4 DESCRIPTION	UNITS PER VEHICLE
	1012191	MOTOR ASSEMBLY COMPLETE	1
1	1011411	BRUSH SPRING PACKAGE (4 PIECES)	1
2	1011283	SCREW, BRUSH RIGGING	2
3	1011410	BRUSH PACKAGE (4 PIECES)	1
4	1011409	RUBBER GASKET PACKAGE (4 PIECES)	2
5	1011407	HARDWARE KIT	4
6	1011275	MOTOR CLAMP SCREW (CE)	2
7	1011284	BRUSH RIGGING	1
8	1011412	SCREW, POLE PIECE PACKAGE (8 PIECES)	1
9	1011413	FIELD POLE PIECE PACKAGE (4 PIECES)	1
10	1011288	FIELD COILS, MODEL 1012191 — 2 HP	1
10	1011289	FIELD COILS, MODEL 1014678 — 3-1/2 HP	1
11	1011290	BALL BEARING, DOUBLE SHIELD	1
12	7847	BOLT, HEX HEAD, 1/4-20 X 3/4"	2
13	451	LOCKWASHER, 1/4"	5
14	1012177	MOTOR/AXLE CLIP	1
15	1010934	BOLT, HEX HEAD, 5/16-18 X 1"	1
16	7174	LOCKWASHER, 5/16"	1
17	1013893	SCREW, PAN HEAD, #8-32	3
18	1013894	RETAINER-BEARING	1
19	1014201	BOLT, HEX, 1/4-20 X 2-1/4"	3

Section 15

REAR SUSPENSION

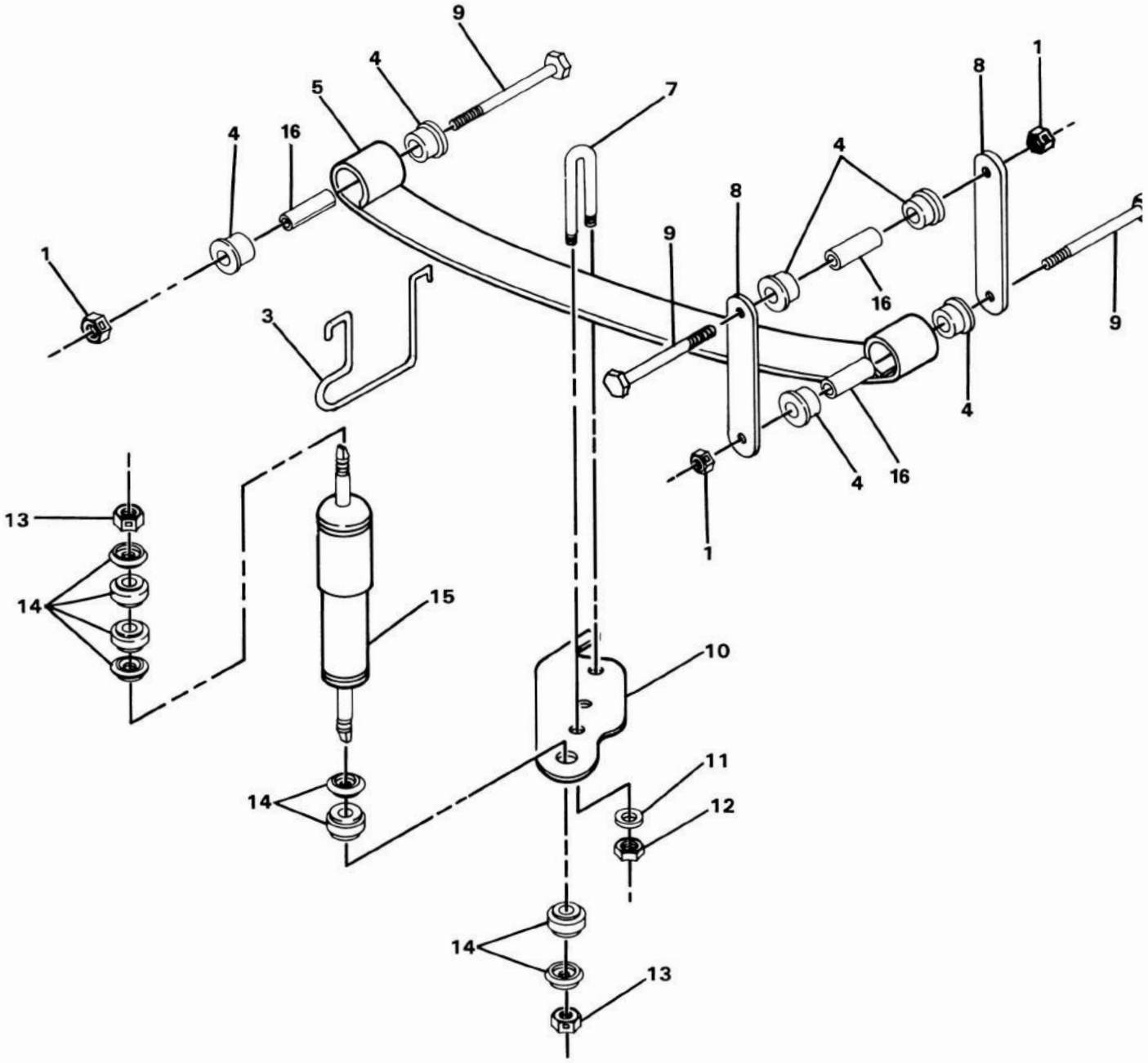

REAR SUSPENSION ASSEMBLY

REAR SUSPENSION ASSEMBLY

ITEM NUMBER	PART NUMBER	1 2 3 4 DESCRIPTION	UNITS PER VEHICLE
1	1010138	DIMPLED LOCKNUT, 3/8-16 UNC	6
3	1013207	BRAKE CABLE SUPPORT	2
4	1015583	URETHANE BUSHING	12
5	1010974	REAR SPRING	2
7	1012180	"U" BOLT	2
8	7569	REAR SPRING SHACKLE	4
9	8755	BOLT, HEX, 3/8-16 UNC X 3-3/8"	6
10	1012181	SHOCK MOUNT, RIGHT HAND	1
10	1012182	SHOCK MOUNT, LEFT HAND	1
11	720	LOCKWASHER, 7/16"	4
12	8938	NUT, HEX, 7/16-14 UNC	4
13	1010145	NUT, HEX, 3/8-24 UNC	4
14	1011415	SHOCK ABSORBER CUSHION KIT	4
15	1014236	SHOCK	1
16	1012303	STEEL BUSHING	6
17	1013164	SHOCK ABSORBER KIT INCLUDES ITEMS 14 AND 15	1

Club Car, Inc.
P.O. Box 204658
Augusta, GA 30917-4658
USA

Web www.clubcar.com
Phone 1.706.863.3000
1.800.ClubCar
Int'l +1 706.863.3000
Fax 1.706.863.5808

Ingersoll Rand
Industrial Technologies